ARMY TM 38-236
NAVSUP PUB 504
AFJPAM 24-207
(FORMERLY AFP 71-8)
DLAM 4145.7
MCO P4030.30C

22 DECEMBER 1991

PREPARATION OF FREIGHT FOR AIRLIFT TRANSPORTATION

THIS COVER PAGE OFFICIALLY CHANGES THE AIR FORCE PUBLICATION NUMBER FROM AFP 71-8 TO AFJPAM 24-207

DEPARTMENT OF THE ARMY TECHNICAL MANUAL	TM 38-236
DEPARTMENT OF THE NAVY PUBLICATION	NAVSUP PUB 504
DEPARTMENT OF THE AIR FORCE PAMPHLET	AFP 71-8
DEFENSE LOGISTICS AGENCY MANUAL	DLAM 4145.7
MARINE CORPS ORDER	MCO P4030.30C

PREPARATION OF FREIGHT FOR AIRLIFT TRANSPORTATION

This manual supersedes TM 38-236/DLAM 4145.7/NAVSUP PUB504/
AFP71-8/MCO P4030.30B, June 1975

Distribution Statement A: Approved for public release;
distribution is unlimited

DEPARTMENTS OF THE ARMY, THE NAVY, THE AIR FORCE
AND THE DEFENSE LOGISTICS AGENCY
DECEMBER 1991

TECHNICAL MANUAL
TM 38-236
NAVSUP PUB 504
AIR FORCE PAMPHLET 71-8
DLAM 4145.7
MCO P4030.30C

HEADQUARTERS,
DEPARTMENTS OF THE ARMY,
THE NAVY, THE AIR FORCE,
AND THE DEFENSE LOGISTICS AGENCY
Washington, DC, *22 December 1991*

PREPARATION OF FREIGHT FOR AIRLIFT TRANSPORTATION

Current as of 1 June 1991

REPORTING OF ERRORS AND RECOMMENDING IMPROVEMENTS

You can help improve this manual. If you find any mistakes or if you know of a way to improve the procedure, please let us know. Mail your letter, DLA Form 987, or DA Form 2028 (Recommended Changes to Publications and Blank Forms) directly to: Dean, School of Military Packaging Technology, ATTN: AMXMC-SMPT-T, Aberdeen Proving Ground, MD 21005-5001. A reply will be furnished directly to you.

		Paragraph	*Page*
CHAPTER 1.	INTRODUCTION		
	Purpose	1-1	1-1
	Scope	1-2	1-1
	Objectives	1-3	1-1
	References	1-4	1-1
	Requirements	1-5	1-2
	Advantages of airlift transportation	1-6	1-2
	Economy in air freight	1-7	1-4
	Recommended changes	1-8	1-4
CHAPTER 2.	MOVEMENT OF AIRCARGO		
	Definition of airlift transportation	2-1	2-1
	Preparation of freight for airlift transportation	2-2	2-1
	Importance of tare weight reduction	2-3	2-2
	Advantages of unit loading	2-4	2-2
	Limitations of airlift transportation	2-5	2-2
	Air shipment systems	2-6	2-3
	Systems operating primarily within CONUS	2-7	2-3
	Commercial air service in CONUS	2-8	2-4
	Systems operating primarily beyond the continental limits of the United States	2-9	2-5
	Commercial service outside the continental United States	2-10	2-5
	Types of materials-handling equipment	2-11	2-5
	Air terminal operations and handling of cargo	2-12	2-11
	Aircraft loading and packing requirements	2-13	2-13
	Cargo tiedown devices	2-14	2-14

Distribution Statement A Approved for public release: distribution is unlimited.

***This publication supersedes TM 38-236/DLAM 4145.7/NAVSUP PUB 504/AFP 71-8/MCO P4030.30B, June 1975.**

		Paragraph	Page
CHAPTER 3.	PACKAGING FOR AIRLIFT SHIPMENT		
	Explanation of terms	3-1	3-1
	Preservation	3-2	3-1
	Packing for air shipment	3-3	3-1
	The importance of, and need for packing	3-4	3-1
	Packer's responsibility	3-5	3-3
	Study of the item characteristics	3-6	3-3
	Sequence of packing operations	3-7	3-6
	Packaging materials	3-8	3-7
	Storage facilities	3-9	3-7
	Shipping containers utilized in packing for air shipment	3-10	3-7
	Reduction of weight and cube	3-11	3-7
	Relation of packing to air terminal operations	3-12	3-8
CHAPTER 4.	SPECIAL PURPOSE LIGHTWEIGHT CONTAINERS		
	General characteristics of lightweight containers	4-1	4-1
	Kraft paper envelopes	4-2	4-1
	Mailing and filing tubes (Specification PPP-T-495)	4-3	4-1
	Paperboard boxes (folding, setup, and metal-stayed)	4-4	4-3
	Metal containers	4-5	4-3
	Other lightweight shipping containers	4-6	4-4
CHAPTER 5.	CONSOLIDATION, UNITIZATION, AND PALLETIZATION OF AIRFREIGHT		
	General concepts	5-1	5-1
	Consolidation, unitization, and palletization (general)	5-2	5-1
	Shipment units	5-3	5-2
	Use of consolidation and unitization containers (general)	5-4	5-4
	Expendable fiberboard pallet boxes	5-5	5-6
	Fiberboard consolidation boxes	5-6	5-10
	Boxes, shipping consolidation (MIL-B-43666)	5-7	5-12
	Blocking and bracing techniques	5-8	5-13
	Packing consolidated containers	5-9	5-18
	Utilization of pallets (general)	5-10	5-20
	Palletized unit loads	5-11	5-22
CHAPTER 6.	SKID ASSEMBLIES		
	Skid assemblies	6-1	6-1
	Wood assemblies	6-2	6-1
	Metal assemblies	6-3	6-6
	Selection and use of aluminum skids	6-4	6-8
	Control and use of aluminum skid	6-5	6-9
CHAPTER 7.	SPECIAL BOX AND CRATE SPECIFICATIONS DESIGNED FOR AIRLIFT		
	Crates, general	7-1	7-1
	Classification of crates	7-2	7-1
	Design and selection of crates	7-3	7-2
	Open wood crates, general	7-4	7-3
	Special class of wood cleated boxes and slotted angle crates	7-5	7-4
	Boxes, wood cleated, skidded, load-bearing base (2,500-pound maximum net weight)	7-6	7-4
	Other shipping containers for aircraft components	7-7	7-4
	General purpose crates	7-8	7-4
CHAPTER 8.	CONTAINER SELECTION		
	Introduction to container selection	8-1	8-1
	Container requirements	8-2	8-1
	Selecting a shipping container	8-3	8-5
	Selecting the lightest suitable container	8-4	8-21
	Shipping container and packing instructions	8-5	8-21
	Consolidation	8-6	8-22
CHAPTER 9.	BLOCKING, BRACING, CUSHIONING, AND ANCHORING		
	Necessity for blocking, bracing, cushioning, and anchoring	9-1	9-1
	Hazards of Airlift Transportation	9-2	9-1
	Blocking, bracing cushioning, and anchoring	9-3	9-1
	Physical characteristics of the item	9-4	9-3
	Cushioning materials	9-5	9-5
	Application of blocking and bracing materials	9-6	9-5
	Application of anchoring materiels	9-7	9-15
	Absorbent materials used for packaging hazardous liquids	9-8	9-15
	Computation of absorbent materials for hazardous liquids	9-9	9-16

CHAPTER 10. AIR DELIVERY	Paragraph	Page
Definition of terms	10-1	10-1
Types of air delivery	10-2	10-1
Methods of air delivery	10-3	10-1
Aircraft utilized for air delivery	10-4	10-2
Air delivery containers and loads	10-5	10-2
Types of items rigged in air delivery containers	10-6	10-6
Cushioning materials used for container loads	10-7	10-6
Air delivery platforms	10-8	10-8
Types of items rigged on air delivery platforms	10-9	10-10
Trends and developments in air delivery	10-10	10-10
463L aerial delivery and cargo handling systems	10-11	10-12

LIST OF ILLUSTRATIONS

Figure No.	Title	Page
1-1	Advantages of Airlift Transportation	1-3
2-1	463L Master Pallet	2-6
2-2	463L Nets Attached to Pallet	2-7
2-3	Roller Conveyors	2-8
2-4	40K Aircraft Loader	2-9
2-5	25K Tac Loader	2-10
2-6	10K Adverse Terrain Forklift	2-11
2-7	Cargo Tiedown Devices: MB-1, MB-2, and CGU-1/B	2-16
3-1	Item Damaged As a Result of Inadequate Packing	3-2
3-2	Types of Loads	3-5
4-1	Kraft Paper Envelopes	4-1
4-2	Mailing and Filing Tube (PPP-T-495)/(Commercial Item Description, A-A-865)	4-2
4-3	Styles of Mailing and Filing Tubes (PPP-T-495)/(Commercial Item Description, A-A-865)	4-2
4-4	Paperboard Boxes	4-3
5-1	Unitized Load With Required Markings	5-5
5-2	Expendable Fiberboard Pallet Box (Specification MIL-P-26342)	5-6
5-3	Strapping of Expendable Pallet Boxes (Specification MIL-P-26432)	5-8
5-4	Shrink-Film Bonding	5-9
5-5	Expendable Fiberboard Boxes and Pallets	5-10
5-6	Styles and Types of Fiberboard Consolidation Boxes (Specification MIL-B-38721)	5-12
5-7	Utilization of Consolidation Containers	5-14
5-8	Fiberboard Pads	5-16
5-9	Fiberboard Cells	5-17
5-10	Blocking and Bracing Top Voids	5-19
5-11	Blocking and Bracing Side Voids	5-20
5-12	Blocking and Bracing Interior Voids	5-20
5-13	Examples of Standard (Permanent) and Expendable Pallets	5-21
6-1	Typical Mechanical Equipment Bases	6-3
6-2	Typical Wooden Skid Assemblies Utilizing Grouping I Open-type Bases	6-4
6-3	Typical Wooden Skid Assemblies for Equipment With Pedestal and Similar Group II, Closed Bases	6-4
6-4	Typical Skid Assemblies for Equipment With Rectangular or Irregular Group II, Closed Bases	6-5
6-5	Wooden Skid and Requirements	6-5
6-6	Mounting Provisions for Fastening Items to Skids	6-6
6-7	Use of Bushing to Protect Tolerance of Boltholes In Base of Item	6-6
6-8	Aluminum Skid Components	6-7
6-9	Method of Handling Aluminum Skids	6-9
7-1	Sheathed and Unsheathed Crates	7-2
8-1	Container Selection Chart for Air Shipment	8-7
8-2	Items Not Requiring An Exterior Container for Air Shipment	8-9
8-3	Aircraft Engines Protected With Nylon or Polyethylene Covers	8-11
8-4	Heater Protected With Canvas Cover	8-12
8-5	Item Mounted on Skid Base	8-13
8-6	Example of Item Which Prohibits Top Stacking	8-13
8-7	Item Mounted on Skid Base Fitted With Light Framework to Permit Stacking	8-13
8-8	Delivery of Supplies at Sea	8-14
8-9	Repacking of Gun Drive Assembly in Lightweight Container	8-15
8-10	Loads That Lend Support to All Faces of the Container	8-16
8-11	Methods of Reinforcing Containers	8-18
8-12	Waterproofing Containers	8-20
8-13	Weight and Cube Reduction Through Proper Container Selection	8-21
9-1	Item Characteristics Which Determine the Selection of Blocking, Bracing, or Cushioning	9-3
9-2	Open-end Cells and Trays	9-6
9-3	Corrugated Fiberboard Accordion-folded Flat Pads	9-7
9-4	Multiple-layer Corrugated Fiberboard Corner Pads	9-7
9-5	Use of Liner to Reinforce Container	9-8
9-6	Methods of Cushioning and Blocking	9-10
9-7	Positioning Load	9-11
9-8	Use of Wooden Blocks and Braces	9-12
9-9	Use of Plywood for Blocking and Bracing	9-14
10-1	Air Delivery Containers Packed for Airdrop	10-3
10-2	CTU-2/A Container Packed for Airdrop	10-4
10-3	CTU-2/A Container in Operation	10-5
10-4	Collapsible Fuel Drum	10-6

LIST OF ILLUSTRATIONS—Continued

Figure No.	*Title*	*Page*
10-5	Energy Absorbers For Airdrop	10-7
10-6	A Two-Platform Load For Tandem LAPE Airdrop	10-8
10-7	Type II Modular Airdrop Platform	10-9
10-8	Type V Airdrop Platform	10-10
10-9	Typical Honeycomb Stack	10-11

LIST OF TABLES

Table No.	*Title*	*Page*
1-1	Uniform Materiel Movement and Issue Priority System (UMMIPS) Time Standards	1-4
4-1	Cross-reference Guide to Other Shipping Containers	4-4
7-1	Cross-reference Guide to Other Crates	7-5
8-1	Interior Containers—Selection by Weight of Contents and Size of Containers	8-1
8-2	Exterior Containers—Selection by Maximum Weight of Contents Limitations	8-2
8-3	Special Containers—Based on Weight and Size of Limitations	8-3
10-1	Limitations For Type II Modular, Type V, and LAPE Modular Airdrop Platforms	10-8

CHAPTER 1
INTRODUCTION

1-1. Purpose

a. This manual contains information on the fundamental principles and approved methods and techniques used when preparing military supplies and equipment for air shipment. It is published as an official document for use in operations and in the training of military and civilian personnel from all segments of the Department of Defense and supporting agencies as well as for interested industrial personnel. It contains information based on specifications, standards, and other pertinent documents, current as of the date of preparation and coordination of the publication. Contractors must refer to the specifications referenced in their contract as the legal documents to be used in performing packaging for the military.

1-2. Scope

a. This manual provides information on the preparation of military supplies and equipment for airlift, with emphasis on proper packing for reduction of weight and cube. It contains information on air transport systems, 463L materials-handling system, selection and use of shipping containers, packing requirements, cushioning, blocking, bracing and anchoring, consolidation of shipments, loading of aircargo, and the requirements for preparation of material for air delivery.

NOTE

When preparing hazardous material for military airlift, refer to the joint directive AFR 71-4/TM 38-250/NAVSUP PUB 505/MCO P4030.19/DLAM 4145.3 (Preparation of Hazardous Materials for Military Air Shipment). For civil airlift transportation, refer to the applicable section of the Code of Federal Regulations, Title 49 (49 CFR) and the Dangerous Goods Regulations of the International Air Transportation Association (IATA) or its regulatory basis, the International Civil Aviation Association (ICAO) Technical Instructions. For details concerning Defense hazardous materials consult the DOD Hazardous Materials Information System (HMIS) which can be supplied on microfiche. Effective 1 January 1991, most hazardous material shipped overseas must be in a container that has passed United Nations (UN) Performance Oriented Packaging (POP) tests, and must be marked with the appropriate UN certification mark. POP certified containers should not be opened, unless in rare instances of, e.g., suspected damage, or defective packaging, etc. If the package is opened for such reasons as mentioned, it must be closed and re-sealed with its contents in tack and in the same appropriate manner as existed before the package was opened or, otherwise, the UN certification marking will be voided. When shipping materials by mail overseas (to APO and FPO), the hazardous materials must comply with air shipment provisions of 49 CFR as stated in US Postal Service Publication 52.

1-3. Objectives

a. This manual outlines the objectives for achieving uniform packing of military supplies and equipment for airlift. The objectives are as follows:

(1) Provide efficient and economical protection to supplies, materials, and equipment during handling, shipment, and storage from time of original purchase until used.

(2) Prevent deterioration of supplies, materials, and equipment.

(3) Provide identification, handling, and shipment markings.

(4) Effect economies by using packages and containers of a minimum tare weight and cube, consistent with the anticipated storage and shipment hazards.

(5) Reduce the loss and damage to shipments which are caused by faulty packaging or improper handling.

1-4. References

a. Throughout this joint service manual, packaging and packing materials, containers, methods, techniques, etc., are referenced by their common names together with the appropriate document, i.e., specifications, standards, etc. Copies of specifications and other documents required by activities of the Departments of the Army, the Navy, and the Air Force can be obtained from supply sources through established channels. Copies of specifications, standards, and drawings required by con-

tractors in connection with specific procurement functions should be obtained from the contracting officer.

1-5. Requirements

a. This manual contains the basic requirements for preparation of military supplies and equipment for airlift transportation. The basic requirements for preservation and packing of military supplies and equipment are contained in the following joint service publications:

(1) Packaging of Materiel, Preservation, Volume I, DLAM 4145.2, VOL. I, TM 38-230-1, AFP 71-15, Vol. I, NAVSUP PUB 502, Rev. Vol. I, MCO P4030.31.

(2) Packaging of Materiel, Packing, Volume II, DLAM 4145.2, Vol. II, TM 38-230-2, NAVSUP PUB 503, AFP 71-16, MCO P4030.31. These are often referred to as the "Packaging Manuals." Information concerning specific airlift operations and technical procedures relating to various aircraft characteristics are found in documents such as Air Force regulations, technical publications, and fact sheets. Marking requirements for military packages are found in MIL-STD-129. Additionally, there are special preservation, packing, marking, and palletization requirements that are firmly established by the various military services for valid reasons. These requirements are considered mandatory and shall not be altered without prior consent of the military service concerned.

1-6. Advantages of Airlift Transportation

a. Speed of Delivery. The Uniform Materiel Movement and Issue Priority System (UMMIPS) has established time standards for movement and issue of supplies within CONUS and to an overseas destination. At the heart of UMMIPS is the Issues Priority Designator which determines the transportation priority and in turn the method and speed of movement. Generally, cargo assigned transportation priority one or two is eligible for air shipment. Transportation priority three cargo normally must travel by surface. Table 1-1 illustrates the speed required for air shipments.

b. Mobility and Flexibility. Although all modes of transportation are vital parts of a support system, maximum mobility and flexibility can become a reality only through the use of air transportation. The Services' objectives in this respect are to develop a rapid and flexible air logistics support system in order to provide a wartime capability for deploying combat forces and their equipment; resupplying the deployed forces; and, in both peace and war, realize economies in procurement, packaging, storing, and distribution of supplies, all of which would not be possible if a surface distribution system were relied upon as the normal means of transportation.

c. The attainment of such objectives, as depicted in figure 1-1, will result in the following benefits:

(1) lower stock levels of supplies in forward areas.

(2) less stockpiling of supplies overseas.

(3) a logistics system that will react in hours to deploy combat forces and to have joint-forces capability.

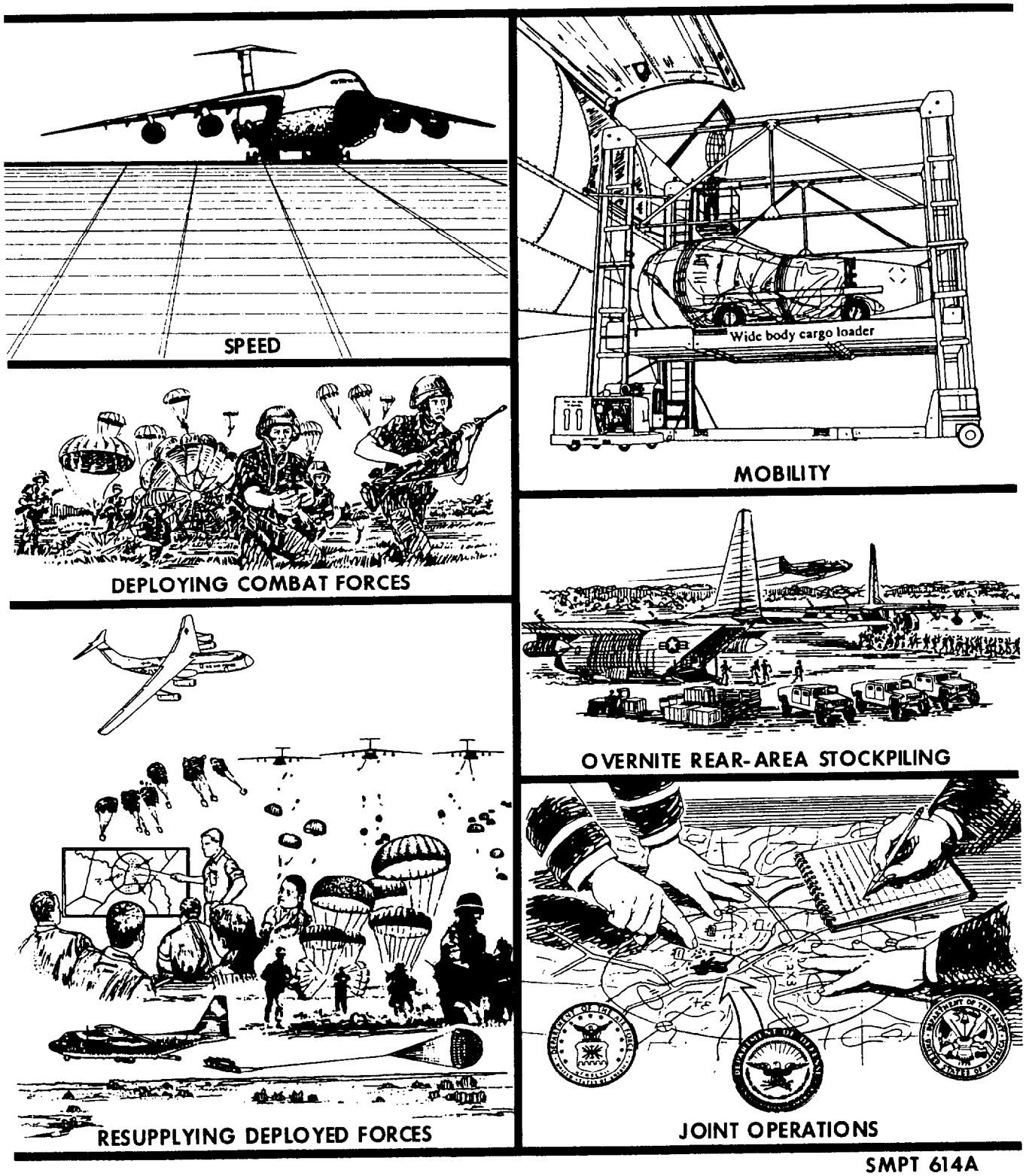

Figure 1-1. Advantages of Airlift Transportation

1-7. Economy in Air Freight

a. The primary consideration in military packing is to provide adequate protection at the lowest possible cost, compatible with the logistic environment and the user's anticipated requirements. Packaging costs are a substantial part of the military budget. Packaging methods should be examined for means of effective savings, when practical. These savings can be realized if those engaged in packaging will accept the responsibility of practicing conservation and economy. Economy measures, consistent with the degree of protection required by an item, should be of prime concern to individuals engaged in establishing the requirements for preparation of supplies for airlift. An example of a method of conservation is reclaiming and reusing packaging materials and containers.

1-8. Recommended Changes

a. Users of this manual are encouraged to submit recommended changes or comments to improve the contents. Comments should be keyed to the specific chapter, page, paragraph, and line of the text in which the change is recommended. Reasons should be submitted for each comment to ensure understanding and evaluation. Comments should be prepared using a designated agency service form such as DA Form 2028 or DLA Form 978, etc. and forwarded to Dean, School of Military Packaging Technology, ATTN: AMXMC-SMPT-T, Aberdeen Proving Ground, MD 21005-5001.

Table 1-1. Uniform Materiel Movement and Issue Priority System (UMMIPS) Time Standards.

Pipeline Time Segment	*Time Standard (in Calendar Days) for Priority Designators*		
	01-03 (TP-1)	*04-08 (TP-2)*	*09-15 (TP-3)*
A. Requisition Submission	1	1	2
B. ICP Availability Determination	1	1	1
C-1. Depot/Storage Site Processing***	1	2	*7
C-2. Transportation hold and CONUS Intransit***	3	6	*11

*Area***	*CONUS*	*1*	*2*	*3*	*4*	*CONUS*	*1*	*2*	*3*	*4*	*CONUS*	*1*	*2*	*3*	*4*
D. POE and/or CCP Processing and Intransit to Carrier	N/A	2	2	2	3	N/A	2	2	2	3	N/A	10	10	10	25
E. Intransit overseas	N/A	1	1	2	3	N/A	1	1	2	3	N/A	10	15	25	30
F. POD processing	N/A	1	1	1	2	N/A	1	1	1	2	N/A	3	3	3	8
G. Intra-theater intransit	N/A	1	1	1	2	N/A	1	1	1	2	N/A	5	10	5	5
H. Receipt take-up by requisitioner	1	1	1	1	1	1	1	1	1	1	3	3	3	3	3
I. Total order-ship time	7	12	12	13	17	11	16	16	17	21	24	52	62	67	92

N/A=Not applicable.
* Time standards for segment D are to be added to C-1 and C'2 combined time when SEAVANS are loaded at source.
** Areas:
1. To Alaska, Hawaii, Guam, Caribbean, or Central America.
2. To United Kingdom and Northern Europe.
3. To Japan, Okinawa, Korea, Philippines, and Western Mediterranean.
4. Hard life areas—all other destinations not included in 1-3 (e.g., South America, Eastern Mediterranean, North Atlantic, Africa, Diego Garcia, etc.) to be determined by Military Airlift Command (MAC) (air) or Military Traffic Management Command (MTMC) (surface).
*** Depot and/or storage site processing will be measured separately from transportation hold and CONUS intransit in the Air Force. C-1 and C-2 are combined as one time segment/standard under DOD UMMIPS (4410.6) and DOD MILSTEP (4500.25-3-M) entitled "Depot and/or storage site processing and CONUS intransit."

NOTES:
1. Combine segments C and D as a single segment when a SEAVAN is loaded at source.
2. Combine segments D and E as a single segment when cargo is moved breakbulk to POD.
3. AF added: The return of reparable engines will be accomplished using UMMIPS priority 01-03 standards. This is a return from the retail to wholesale level, and retail level to retail level (i.e., Queen Bee, intermediate maintenance).

CHAPTER 2
MOVEMENT OF AIRCARGO

2-1. Definition of Airlift Transportation

a. Airlift transportation is a scheduled or nonscheduled military controlled airlift operated over established or nonestablished routes by commercial or military air carriers.

2-2. Preparation of Freight for Airlift Transportation

a. The movement of freight by air shipment is based on the logistics concept that small stocks of supplies must be maintained for prompt delivery to forward areas when needed. There are several requirements or considerations connected with the maintenance of supplies as will be explained in the following statements:

(1) *Preservation Requirements.* Preservation includes, as applicable, the use of the appropriate cleaning and drying procedures, the application of preservative compounds, protective wrappings, cushioning, interior containers, and complete interior identification markings. This results in the formation of the unit package. The document necessary for establishing requirements for the unit package was referenced in Chapter 1, paragraph 1-5 of this Technical Manual.

(2) *Packing Requirements.* The vital problems associated with airfreight are the reduction of weight and cube to a minimum, maintaining adequate protection, providing for stacking and tie down in the aircraft, and meeting the requirements of all other modes of transportation involved in the shipment. The reduction of weight and cube through the proper selection and use of adequate packing materials and shipping containers or through the use of consolidation is important.

(3) *Levels of protection.* The joint regulations AR 700-15/NAVSUPINST 4030.28/AFR 71-6/MCO 4030.33/DLAR 4145.7 sets forth DOD policy and implements DODI 4100.1 which requires the following levels of protection for all military packaging:

(*a*) Level A or maximum protection.

(*b*) Level B or intermediate protection.

(*c*) Level C or minimum protection.

In addition to the above three levels of protection, the Government may utilize what is termed "industrial packaging." This option means that Government may use specific packaging methods and materials used by industry for any customer, when the technical design of the package meets all conditions of the desired military level of protection. Industrial packaging should provide the required protection at a cost-saving rate. In addition to packing requirements which comply with "Level of Protection" mentioned above, there may be additional or specific packing requirements when supplies and equipment are delivered to troops in the field, either in training or combat zones. The specific packing requirement will, then, depend upon the type of delivery operations to be employed.

(1) The types of air delivery may be categorized as follows:

(*a*) Direct delivery for normal shipments, which will be discussed in a later paragraph, enables the utilization of the full cargo capacity of the aircraft. This type of delivery, however, requires adequate facilities at both takeoff and delivery point, which are often unavailable. Supplies, in this case, are packed the same as for terminal-to-terminal shipments.

(*b*) Delivery by parachute is advantageous in that delivery operations can be made to areas where it would be difficult or impossible for fixed-wing aircraft to land. Parachute operations, though rapid and possible under most weather and terrain conditions, is not without risk to airdropped loads as well as to airdropped troops. Airdropped loads must be specifically prepared. Examples of packing requirements for this type of delivery are found in Chapter 10.

(*c*) The types of airdrop delivery operations are "Freedrop," "High-Velocity," "Low-Velocity," "High Altitude Low Opening Airdrop (HALO)," and "Low Altitude Parachute Extraction System (LAPES)." These operations will be discussed at length in Chapter 10.

(2) *Packing of Supplies for Normal Shipments.* This category includes the major portion of military supplies transported by air. In preparing supplies for this kind of shipment, special attention should be given to the following:

(*a*) The procedure of consolidating or unitizing many small packages or containers into master containers or unit loads has the distinct advantage of sharply reducing cargo handling and aiding in the conservation of cube. Consolidation should be made on the basis of ultimate destina-

tion; otherwise, additional packing requirements will be introduced at oversea destinations.

(*b*) Standardization of packing for air transportation is an essential part of the Department of Defense Standardization Program, which includes all materials, equipment, and processes approved for use by the armed services. This standardization effort has a two-sided approach: to standardize containers and packing materials and to adopt standard techniques of preservation and packing of all items in each commodity class. This will result in a marked reduction in the number and size of containers for better planning and utilization of aircraft space. It will also aid in cross-servicing among the military depots.

(*c*) In deciding which is the proper container to use, the characteristics of the item to be packed must be considered carefully. Here again, weight consistent with the required protection is one of the most important factors.

(*d*) In many cases, air transportation comprises only a portion of the total movement, and long periods of truck, rail, or barge shipments may be involved after the cargo leaves the air terminal. When movement by other modes is anticipated, adequate protection of the item(s) is of prime importance.

2-3. Importance of Tare Weight Reduction

a. Many of the containers and packing methods now in use for oversea shipments were designed to withstand superimposed loads, extreme handling conditions, and long-term exposure to all weather conditions. The containers required to give this kind of protection are often extremely heavy because of their construction. Tare weight (the weight of the container and packing materials alone) is very important when supplies are transported by all modes of transportation. However, in aircargo operations the problem is especially critical because of the relatively high cost factor and the limited availability of airlift. Thus, the principal concern in selecting containers for aircargo is to achieve a minimum of tare weight, consistent with the user's anticipated requirements and the protection needed by the item to withstand the hazards of air transportation and ground handling at the delivery end of the trip. The containers and procedures described and recommended herein will adequately protect most material from the hazards encountered in both domestic and oversea air shipments and limited surface shipments associated with air shipments.

b. It must be emphasized, however, that good packaging alone will not assure safe arrival. Careful handling is also important. Caution must be exercised in attempting to reduce tare weight to prevent this being accomplished at the sacrifice of adequate protection to the item. Some containers and procedures described in this document are not designed to withstand heavy superimposed loads, rough or careless handling, or prolonged exposure to weather. Minor damage is not to be taken as evidence that more packaging or heavier containers are needed. A complete investigation must be made to determine whether the damage was an isolated occurrence or on a repetitive basis.

2-4. Advantages of Unit Loading

To economize on packing, handling, and transportation costs for both domestic and oversea shipments, it is preferred to handling unit loads mechanically rather than to handle individual packages manually. Refer to paragraph 2-11 below pertaining to the 463L Materials-Handling Support System.

a. Better Use of Aircraft Facilities. Unit loading (the use of pallets and containers for consolidation of individual packages) results in better utilization of aircraft, materials-handling equipment, space, and terminal facilities. It also results in reduced ground time, faster turnaround of carriers, and speed in processing through terminals and depots, except at breakbulk points where bulk shipments are separated for distribution to the consignee.

b. Economy Benefits. Additional economic benefits are as follows:

(1) Reduced parking requirements,

(2) Less pilferage and loss of cargo,

(3) Greater protection from the elements,

(4) Reduced documentation,

(5) Fewer damage claims against the carriers, and

(6) Fewer personnel accidents.

2-5. Limitations of Airlift Transportation

Transportation of freight by air is subject to certain limitations imposed by the weight and cube capacity of the aircraft, altitude, and sudden temperature changes, as well as regulations covering "restricted cargo."

a. Weight and Cube. Any increase in weight and/or cube will greatly increase the unit cost of airfreight.

b. Altitude and Temperature. Some military supplies may become damaged when transported in unpressurized cargo compartments.

(1) Pressurized cargo compartments are usually common only on cargo airlift that fly at altitudes above 10,000 feet.

(2) Particular attention should be given to medical supplies so that they are protected against exposure to temperatures beyond their specified range. See DLAR 4145.21/TB Med 284/NAVSUPINST 4610-31/AFR 167-9, Preparation of Medical Material Requiring Freeze or Chill Environment for Shipment.

(3) The same precaution must be observed when transporting biological equipment.

(4) Most airborne equipment should not be affected by low pressure, but damage may occur to ground support equipment unless proper packaging or venting precautions are taken. This requires a study of the equipment characteristics before prescribing the packaging procedures.

(5) Sealed barrier envelopes will not withstand high differential pressure as they may rupture when the external pressure is reduced. However, if they are partly evacuated prior to sealing, the tendency to rupture will be reduced.

(6) The newer types of cargo aircraft introduced into the airfreight system are pressurized and the hazards of altitude and pressure on air shipments should not present a serious problem.

c. Restricted Cargo. Many military supplies are classified as restricted cargo. Consequently, federal and military restrictions are imposed upon them. These materials fall in two general categories as follows:

(1) Hazardous materials include explosives, flammable liquids, flammable solids, compressed gases, poisons, corrosive materials, and radioactive materials.

(2) Other regulated materials include articles not falling in any of the above categories, but which possess irritating, corrosive, magnetic or other characteristics that require particular packing and handling. Strict adherence to packaging guidelines for air shipments of hazardous materials or dangerous goods, as mentioned in the references of the "Introduction" chapter, is necessary to avoid an accident, incident, and/or possible legal prosecution.

2-6. Air Shipment Systems

a. Cargo eligible for air movement should not suffer from a lack of means to be transported by air. Numerous "systems" are currently in operation, either by or for the Department of Defense, to provide a flexible and readily available airlift service for priority cargo. From each system there are many benefits to be derived. Some of these benefits are rapid delivery of priority cargo, better trained ground and aircrews, flexibility for existing route structures to expand in time of emergency, and capability of diverting aircraft from scheduled routes to meet emergency situations. Air transport systems can be regarded as operating either within or outside the continental United States.

2-7. Systems Operating Primarily Within CONUS

a. QUICKTRANS Airfreight System. QUICKTRANS is designed to provide a specialized airlift service with rapid reaction to Navy needs. QUICKTRANS is scheduled air and truck service operating over established CONUS routes. There are several scheduled truck routes, operating as extensions to the airlift routes, which service offline areas. Although certain route segments operate 5 days per week, transcontinental air service is provided 7 days a week. Terminal and airlift operations are provided by contractors. All truck trailers are van type and Navy sealed. Air routes are operated with L-100-30 (Hercules) aircraft equipped with rollerized floors to accept System 463L Pallet loads.

b. Control of QUICKTRANS. Under the Naval Supply Systems Command, the Navy Material Transportation Office, (NAVMTO), Norfolk, Virginia, administers the contracts. The Operations Control Center (OPCON) is operated by NAVMTO. Clearance of shipments into the QUICKTRANS System is a responsibility of NAVMTO, Norfolk, VA.

c. Other Services' Utilization of QUICKTRANS. Other Services and Government agencies are eligible to use QUICKTRANS. All shipments other than Navy sponsored shipments must be routed by NAVMTO, Norfolk, VA, prior to being tendered to a QUICKTRANS terminal.

d. LOGAIR (Logistics Airlift). LOGAIR is a scheduled cargo airlift system operating over established routes within the continental United States between major depots, aerial ports of embarkation (APOEs) and airbases. The Air Force Logistics Command provides operational management and control of the service which began operation in April 1954. Civilian carriers under contract to the Air Force provide aircraft and aircrews, while customer stations furnish ground handling and plane servicing facilities. The LOGAIR airlift system has evolved from hand loaded 13,000-pound ACL C-46 aircraft to modern DC-9, DCL-100, DCL-188, and B-727 aircraft equipped with palletized loading systems.

e. Control of LOGAIR. Operational control of LOGAIR is maintained by the LOGAIR Control Branch at the Air Force Logistics Command (AFLC) Headquarters. The command and control

exercised provides flexibility through the rerouting of flights to meet specific requirements, adjustment of station allocations and the establishment of extra sections to airlift cargo exceeding scheduled flight capability.

f. Utilization of LOGAIR. LOGAIR service is available to all DOD activities when capability exists and provides the most expeditious service to final destination. LOGAIR capability is allocated daily; therefore, cargo clearances must be obtained from terminal managers at the LOGAIR point of entry. The shipper is responsible for the delivery of military cargo to the nearest LOGAIR station. Offline support for military installations is provided to those listed in the LOGAIR routing guide. When cargo is not picked up at the LOGAIR terminating station by the consignee it is the responsibility of that activity to forward all cargo to the final destination by the most expeditious means commensurate with the priority assigned. Traffic is eligible for movement on LOGAIR according to the following conditions:

(1) Authorized by competent authority.

(2) Essential to the national defense or national interest.

(3) Of such an urgent nature that speed of air transport is necessary.

(4) Of such a nature that air transport is the only reasonable or economical means of accomplishing the movement. Each LOGAIR station receives a daily space allocation on all scheduled flights based on requests submitted to the LOGAIR Control Branch, Headquarters, AFLC. The specific amount of allocation for each station is determined by the total requirement submitted by all stations on the route of the flight.

g. The Department of Defense has been granted an exemption from the provisions of the DOT hazardous materials regulations to permit the transportation by air of explosives and other hazardous material deemed essential to national defense via contract airlift services (LOGAIR and QUICK-TRANS). This exemption authorizes the transportation of certain hazardous materials presently forbidden or in quantities greater than those allowed for cargo-only aircraft. However, the air movement of the type cargo must meet the other requirements for air eligibility. Paragraph 1-17 of AFR 71-4, mentioned previously, explains that the Federal Aviation Regulation DOT Exemption 7573 permits transportation of hazardous materials via MAC contract airlift.

2-8. Commercial Air Service in CONUS

a. Expedited Air Service. This scheduled passenger airline offers expedited services, generally airport to airport, as an adjunct to their baggage service, but on-time delivery is often guaranteed.

b. Airfreight Service. This is a transportation service performed by certified, scheduled airlines, but without the degree of priority given to air express. Rates are based upon an airport-to-airport basis.

c. Deferred Airfreight. This is a service provided by some of the major airlines between specified cities in which the freight moves on a space-available basis. The rate structure is low, thus providing competition with surface transportation.

d. Air Package Carriers. This service is offered by carriers who specialize in small packages. It is often less expensive than other services while providing expedited delivery. Package size and weight are generally restricted.

e. Combination Services. Air-truck, air-bus, and airfreight-railways express services are available in many instances, providing for air shipment through carrier agreements to and from points not served directly by commercial airlines. Except when the cost of airfreight is advantageous, its use should be confined to the movement of material which requires expedited handling. Transportation of material by combination services is subjected to airfreight tariffs.

f. Airfreight Forwarders. These are agencies or individuals engaged in the business of assembling, consolidating, shipping, and distributing small lots of freight. Although other carriers perform the physical transportation service, the freight forwarders charge on their own published rates. This service may be used when the expedited handling of material is of advantage to the Government.

g. Charter Air Service. Charter air service is performed by certified, scheduled, and nonscheduled airlines under charter arrangements. Unavailability or inadequacy of other expeditious means of shipment for urgently needed material will be cause for consideration of this service even though cost is an important factor.

h. Assignment of Routing Authority. All chartered airfreight services and shipments of 1,000 pounds or more must be routed by regional directors of the Military Traffic Management Command. Routings involving less than 1,000 pounds, except Navy sponsored shipments, may be routed by local transportation officers. Navy shipments weighing more than 100 pounds will be referred to NAVMTO, Norfolk, VA for clearance/routing.

Contractors are advised to request routings and other advice from the local Defense Contract Management Region (DCMR) transportation office. For specific information concerning Commercial Air Service in CONUS consult AR 55-355/NAVSUP INST 4600.70/AFR 75.2/MCO P4600.14/DLAR 4500.3 Defense Traffic Management Regulation.

2-9. Systems Operating Primarily Beyond the Continental Limits of the United States

a. Military Airlift Command (MAC). MAC is the product of experiences gained during World War II, when it was realized that air transport was an essential part of a nation's strength. MAC is assigned the responsibility for furnishing air transport service on a global basis for the Department of Defense; negotiating contracts for long-term airlift service within the United States; and furnishing military aircraft for use within the United States when commercial capability is exceeded. MAC headquarters is located at Scott Air Force Base, IL. Subordinate to MAC headquarters are the following two Air Forces:

(1) 21st Air Force, with headquarters at McGuire Air Force Base, NJ, is charged with traffic moving between the United States, Iceland, Greenland, Europe, South America, the Middle East, and the Caribbean area.

(2) 22nd Air Force, with headquarters at Travis Air Force Base, CA, is charged with traffic (including air evacuation) moving between the United States, Hawaii, Alaska, Japan, Australia, Korea, and other stations in the Far East.

b. Concept of MAC Operations. A traffic organization within MAC has the function of determining the capability of MAC. The function involves determining the routes to be served, the documentation of traffic on these routes, the acceptance, loading, and other related responsibilities. Traffic, as applied here, deals with the swift and efficient handling of cargo by MAC. MAC currently operates several aerial ports of embarkation (APOEs) from which aircraft and traffic are cleared and processed prior to oversea movement.

c. Military Utilization of MAC. Rate of flow of cargo is based upon predetermined airlift allocations of each service which have been adjusted to MAC schedules. The Airlift Clearance Authority is responsible for regulating the flow of air-eligible cargo into the air terminal, providing the necessary data to the terminal operator and the service sponsoring the shipment, and making changes in routings as conditions require.

d. Intratheater Airlift. The concept of Intratheater airlift was first applied in Europe in late 1953 when it was determined that existing surface transportation was often too slow and vulnerable to support a combat mission. Intratheater airlift was designed to provide for the reduction of stock levels and to maintain combat units at fighting strength. Intratheater airlift developed slowly and underwent many changes during its early stages, but has since become an important arm of the logistics system. Intratheater airlift service operates entirely within a theater of operations. Intratheater airlift operates in a manner similar to MAC. The C-130 is commonly used for theater operations.

2-10. Commercial Service Outside the Continental United States

a. Movement by commercial air from CONUS to oversea destinations is used only when it is in the best interest of the Government. Aircraft registered under the laws of the United States are used, unless they are not available or the nature of the shipment requires use of a foreign flag aircraft.

b. Shipments weighing 1,000 pounds or less are releasable by the local transportation officer. However, shippers of Navy material will obtain clearance and routing from the NAVMTO, Norfolk, VA, for all shipments moving by commercial air transportation from a point in the 48 contiguous States to a point outside the 48 contiguous States. Route orders for the CONUS portion of the shipment are subject to regulations of the Military Traffic Management Command.

2-11. Types of Materials-Handling Equipment

a. Cargo materials-handling equipment is the primary key to efficient handling, loading, and offloading of aircraft. This equipment is used to conserve manpower, reduce ground-handling time of aircraft, and reduce damage. All of the different types of materials-handling equipment may not be available at every airfreight terminal, but the fact that an item is not on hand does not always mean that it is not authorized or cannot be provided. This paragraph covers representative types of materials-handling and loading equipment found at air terminals. Some of this equipment is a result of the 463L program. Other equipment has been in use for an indefinite period of time.

b. Materials-Handling Equipment Defined. Materials-handling equipment includes all mechanical devices and aids for handling supplies, weapons, and equipment during any process of movement. The term includes special purpose of nonstandard equipment (either in use or under development) used to load or unload aircraft, other carriers, or to handle special weapons; and excludes

construction and installation maintenance equipment and equipment furnished to the contractor in support of contract obligations.

c. 464L Cargo System. The 463L pallet system was developed in April 1963. This system greatly reduces the time spent actually loading the aircraft. As a result of this fact, the total ground time is reduced and the airlift assets involved can be more fully utilized. This system consists of the following three basic elements:

(1) the standard cargo 463L pallet and pallet nets,

(2) the truck or K-loader, and

(3) the roller and restraint rail system on the cargo aircraft floors.

d. The cargo 463L pallet shown in figure 2-1, is a 10,000 pound capacity steel platform which weights 290 pounds without nets. The weight of the net-set is 65 pounds. The 463L measures 108 by 88 by 2¼ inches and can stack loads up to 96 inches high. It has a usable space of 84 inches long by 104 inches wide. Conforming to specifications MIL-P-27443, it has indented locking features on all four edges and 22 tiedown right of 7,500 pound capacity installed around four sides of the pallet. The pallet is flat, continuous on top and bottom, and has a core made of balsa wood or fiberglass. The pallet has a covering, top and bottom, made of aluminum veneer sheating, ⅛ inches thick.

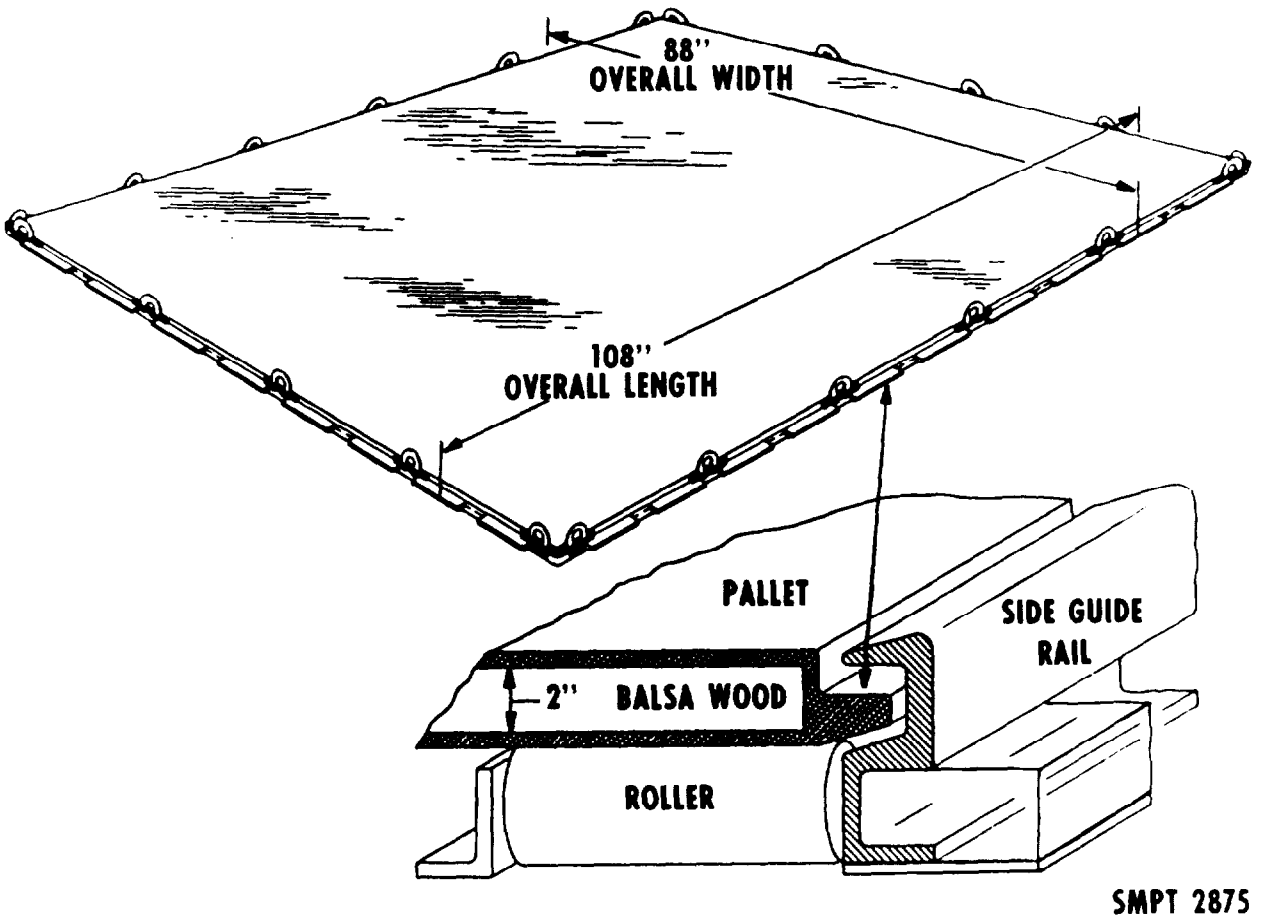

Figure 2-1. 463L Master Pallet.

e. The large pallet net shown in figure 2-2 conforms to specification MIL-N-27444 which has a maximum rated capacity of 10,000 pounds, and is constructed of 1¾-inch-wide nylon webbing with hardware fittings located around the base of the net for attachment to the pallet restraint rings. The net assembly consists of a top new (HCU-15/C) and two side nets (HCU-7/E). Figure 2-shows how two bottom nets have been placed around the cargo, and the hooks go into the rings on the pallet corners. The net goes over the load and is fastened to the bottom hooks. To prevent damage to the cargo, the hooks face outward.

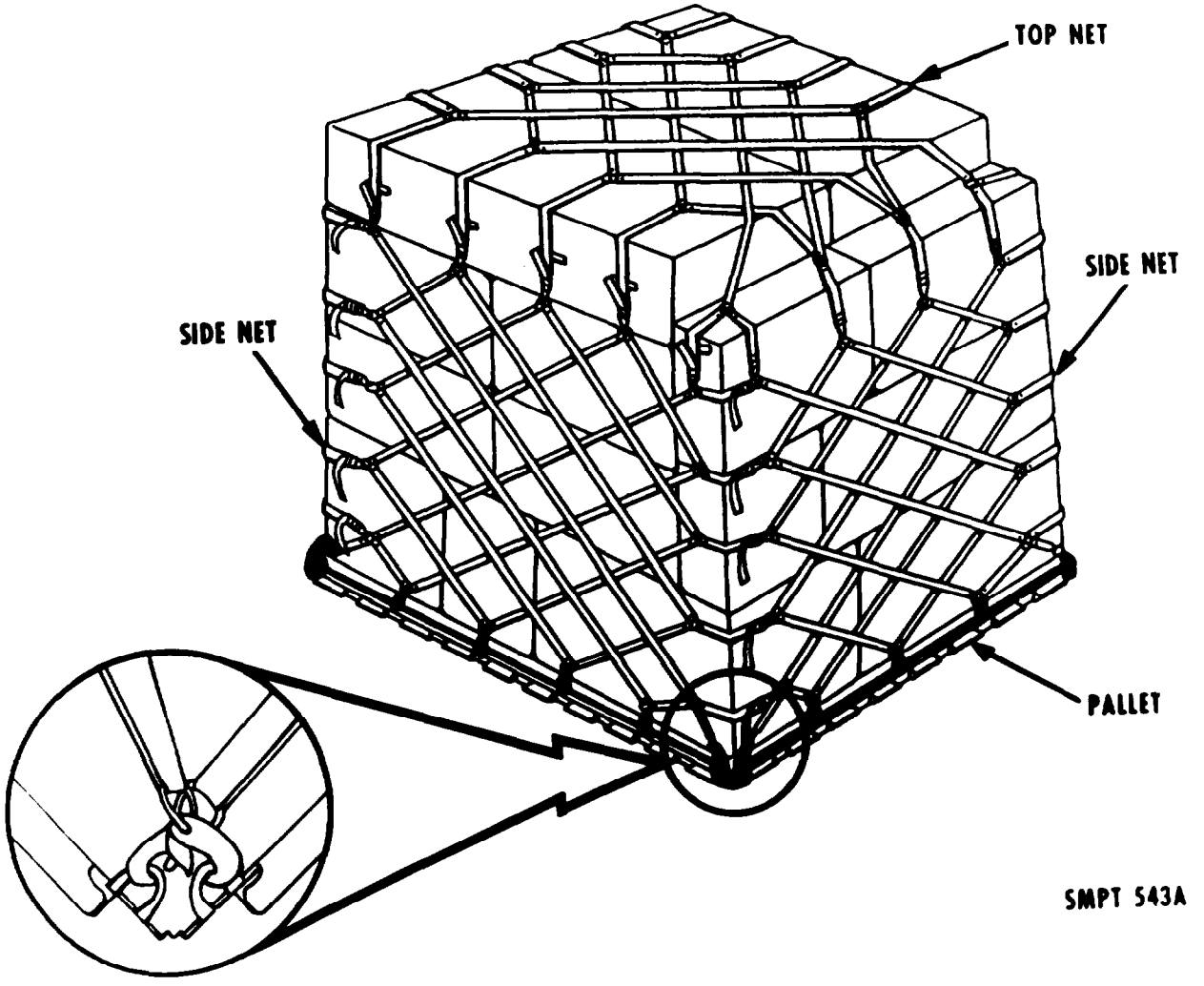

Figure 2-2. 463L Nets Attached to Pallet.

f. Roller conveyors of the 463L system are the rollers and locking system placed on aircraft floors. Air Force cargo aircraft have been modified to accommodate this system shown in figure 2-3. The rollers can be stowed out of the way and then quickly installed when needed. Pallet loads are pushed onto the rollers to predesignated fuselage stations and locked in place. No further restraint is necessary.

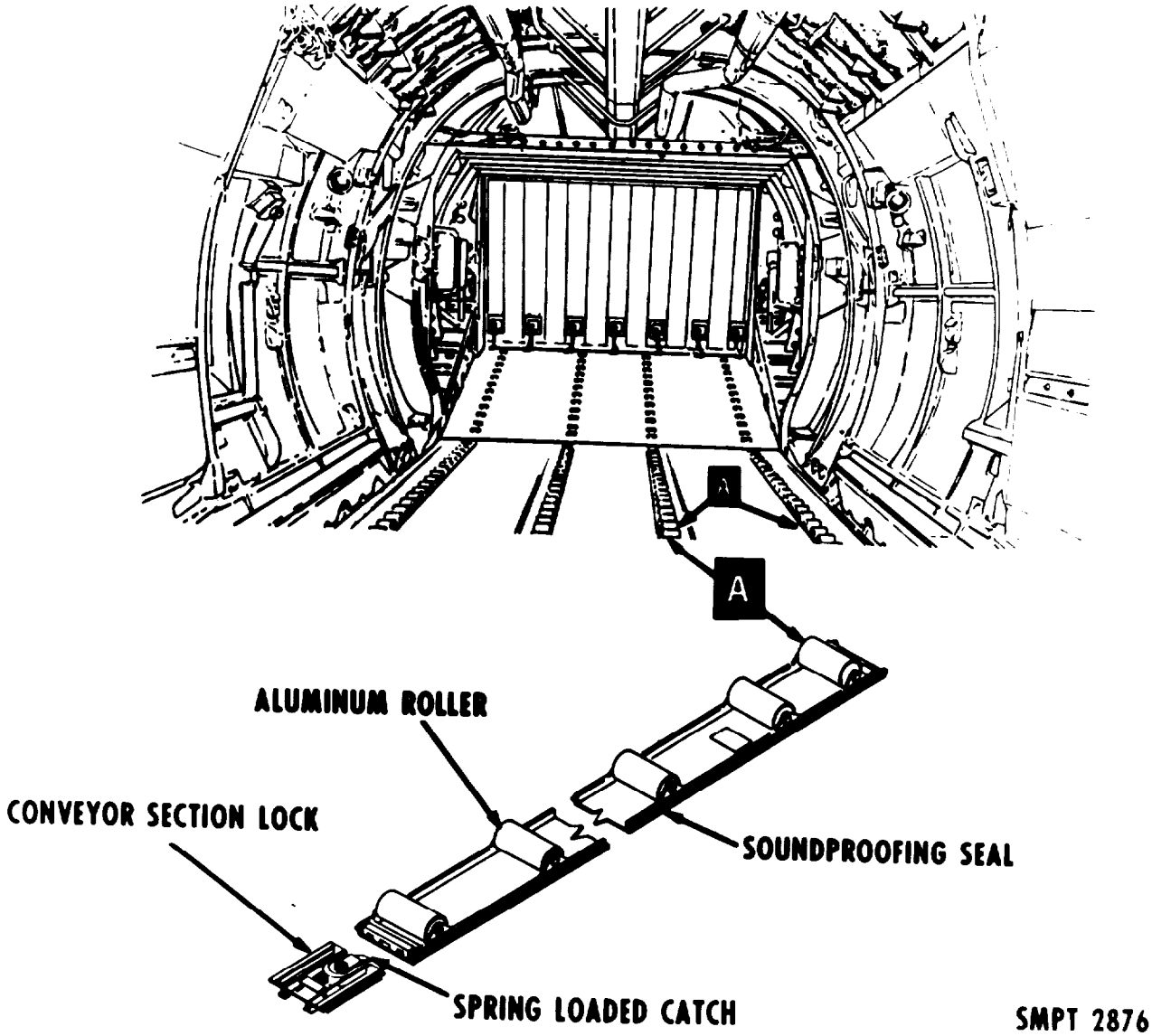

Figure 2-3. Roller Conveyors.

g. Aircraft Cargo Loader, 40,000-Pound Capacity. This is a mechanized, self-propelled vehicle as shown in figure 2-4 with a conveyorized platform 10 feet by 40 feet, capable of receiving and discharging 40,000 pounds of palletized cargo from 40 inches to 156 inches above the ground, handling a complete load of five master cargo pallets, and accommodating general cargo loads or wheeled vehicles. It is capable of varying the pitch angle of the cargo platform 7 degrees forward and 7 degrees aft, and 5 degrees laterally. This vehicle is used for loading and offloading both low and high floor aircraft.

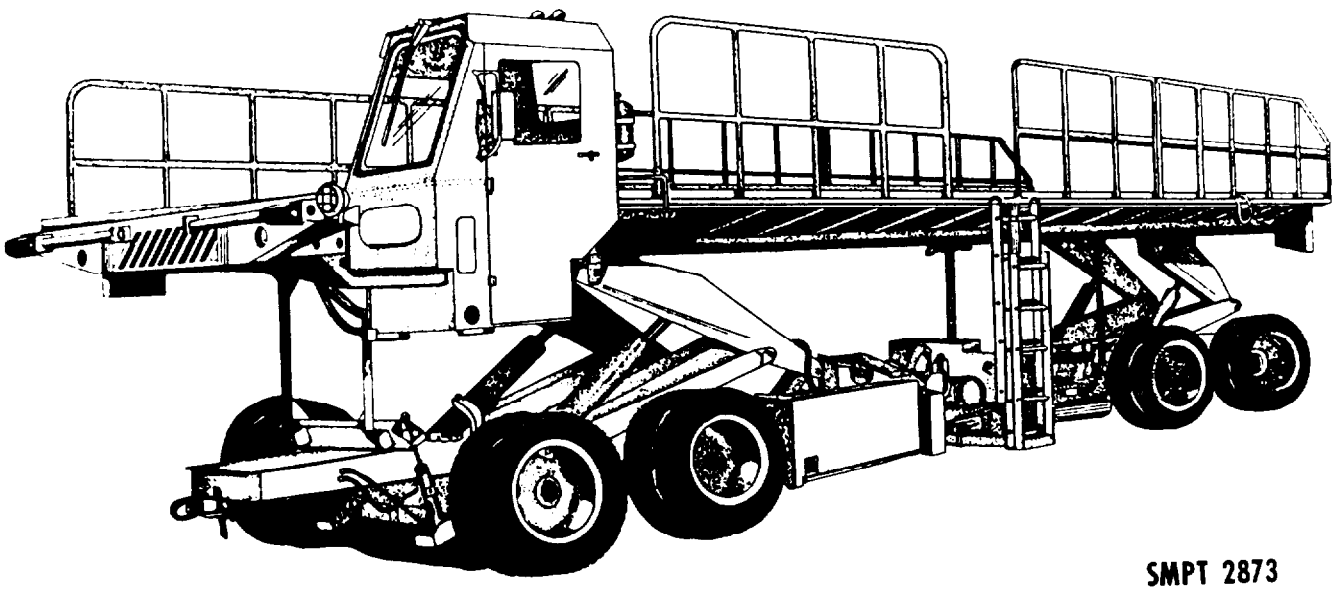

Figure 2-4. 40K Aircraft Loader.

h. Aircraft Cargo Loader, 25,000-Pound Capacity. This is a smaller version of the vehicle discussed in c above, and is used for the same purpose; however, the platform size is reduced to 110 inches by 25 feet. This 25K tac loader holds 3 pallets and is shown in figure 2-5.

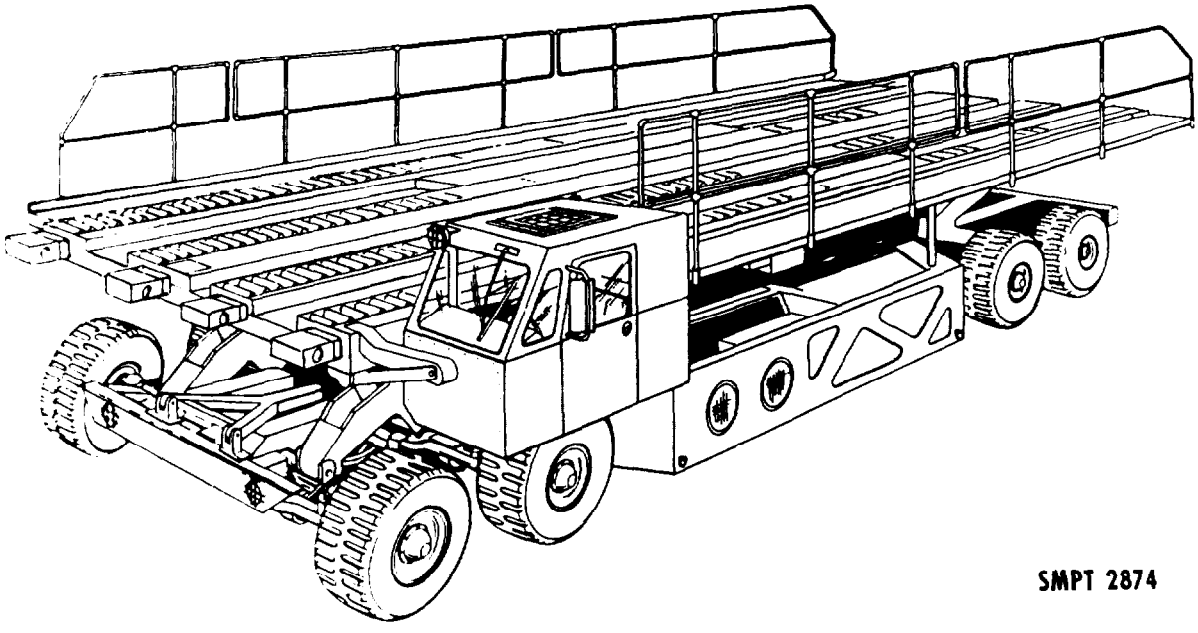

Figure 2-5. 25K Tac Loader.

i. Flat-Bed Trailer. The flat-bed trailer is used to haul cargo from the packing area to the airfreight terminal for processing.

j. Other Types of Materials-Handling Equipment. Included in this category are forklift trucks of different rate capacities, portable winches designed for the 463L system, trailers, trucks, and dollies. The 10K adverse terrain forklift shown in figure 2-6 is useful in many parts of the world, especially in combat zones, where supplies have to be moved from rough terrain onto the tarmac or loading strip for airlift operations. It provides the maneuverability to lift loads from rough terrain but, for a word of caution, it can lift up to its maximum of 10,000 pounds if its counterweights are in place. When counterweights are reduced, its lifting capability is also reduced. When lifting the 463L pallet, the 10K forklift must have tines of 72 inches long for balancing purposes. A check of the proper heavy equipment manual or T.O. should keep the operator out of trouble.

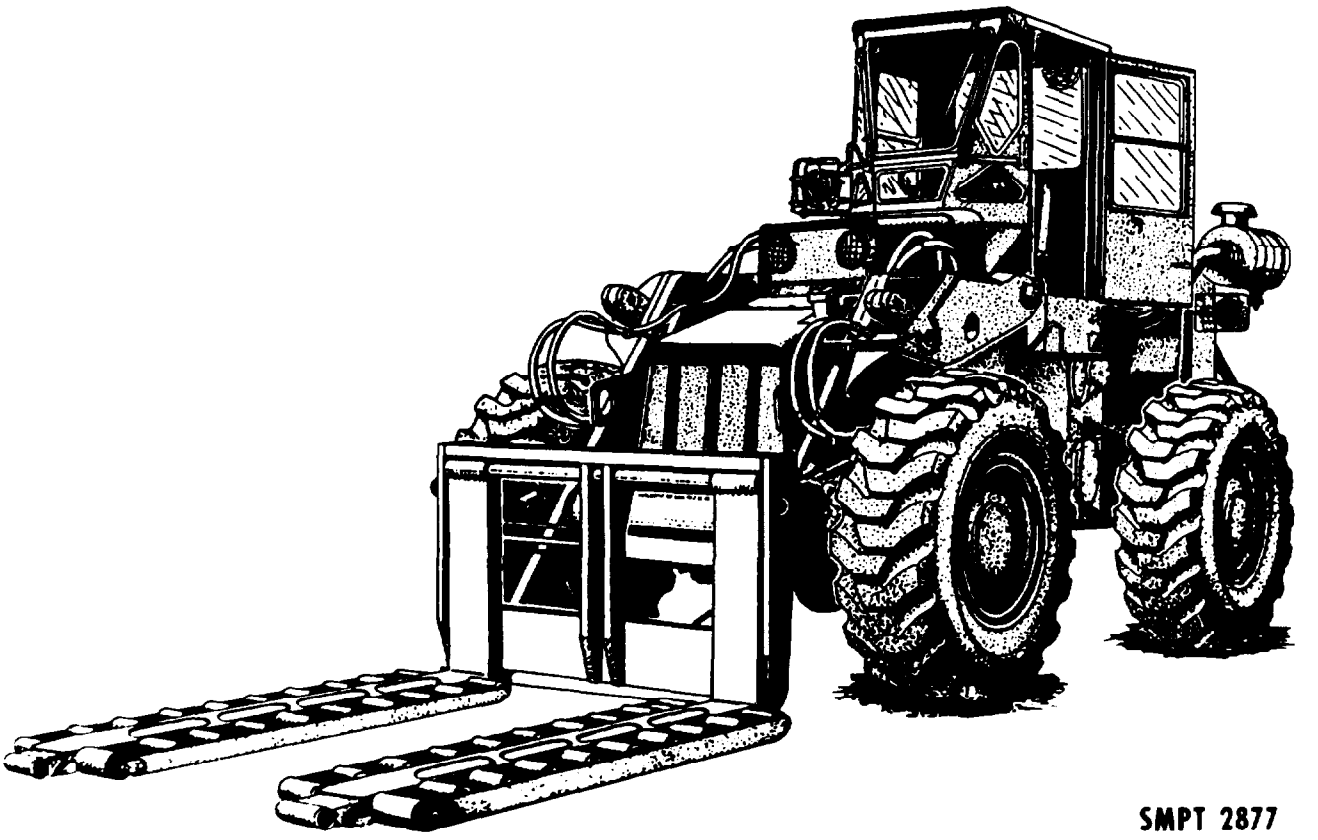

Figure 2-6. 10K Adverse Terrain Forklift.

2-12. Air Terminal Operations and Handling of Cargo

a. From the rapid advances in technology over the past two decades have come improved aircraft, capable of greater speeds and greater load capacities. Advances in terminal and aircraft loading operations have not kept pace with the greater capability provided by newer aircraft. Only in recent years have studies been made and actions taken as a result of these studies to improve terminal operations. Personnel that have the responsibility of preparing material for airlift should have a knowledge of how materials are processed. Processing cargo includes accepting cargo for airlift and warehousing cargo in an airfreight terminal until it is to be shipped. Fundamentally, all air terminals operate in a similar manner regardless of their basic design, mechanization, or volume of cargo traffic. This paragraph contains information concerning the handling of general and special cargo for airlift. To better understand the functions of an air terminal, some knowledge of its organizational structure is necessary.

b. Typical Terminal Elements. Terminals are usually divided into passenger and freight sections for fast and efficient movement of passengers, patients, baggage, cargo, and mail. The basic elements that make up the freight section of air terminals are as follows:

(1) *Inbound receiving.* For cargo and mail.

(2) *Outbound shipping.* For cargo and mail.

(3) *Warehouse.* For storage of inbound and outbound cargo.

(4) *Computer/ADPE operations.* Operates assigned computer and other ADPE equipment.

(5) *Mailroom.* For originating and intransit mail storage plus short storage for terminating mail awaiting pickup by the post office.

(6) *Security room.* For storage of classified and valuable shipments.

(7) *Cold storage.* For storage of perishables.

(8) *Air terminal operations center.* Responsible for coordinating all traffic activities.

(9) *Outside storage.* For storage of dangerous materials and outsized cargo.

(10) *Administrative office.* Responsible for filing and disposition of records, reports, and receipts.

(11) *Military Air Traffic Coordinating Unit (MATCU).* Responsible for orderly flow and control of traffic for air transportation.

c. General Cargo. General cargo is cargo that does not require special handling. General cargo may be crated, boxed, sacked, unitized, palletized, consolidated, skid-mounted, or unpacked cargo. If this material is too large to be handled by packing lines, it will be classed as oversized cargo and will be stowed outside the terminal. Air terminals will provide protective covers for oversized cargo stored outside the terminal during periods of inclement weather.

d. Special cargo. Special cargo is cargo that requires special handling procedures. All special cargo is not dangerous, although all of it requires special handling procedures and precautions to ensure safety, security, and protection to both aircraft and personnel. Special cargo may be classified in the following categories: classified cargo, perishables, medical items (biologicals), sensitive cargo, dangerous materials, human remains, birds and animals, inbond shipments, and frustrated cargo. Only a few of these categories will be treated in this section to point out that special measures are taken in processing special cargo at air terminals. An example of those categories are as follows:

(1) *Classified cargo.* It is the responsibility of the shipper to inform traffic that a shipment is classified. Traffic personnel at originating, en route, and terminating stations are responsible for ensuring that classified cargo is safeguarded. Classified cargo may be placed in a properly locked security room or may be kept under surveillance of an armed guard. Classified shipments consisting of more than one piece will not be split en route.

(2) *Perishable medical items (biologicals).* For handling purposes, perishable medical shipments are considered as top priority cargo. Each air terminal will ensure that all insulated containers are filled with refrigerant when the shipment is forwarded. Shipments requiring en route transfers are forwarded on flights whose connections will provide minimum transit time. Movement on other than MAC flights is prohibited except in an emergency, and then the aircraft must be going directly to the destination of shipment. Special labels have been prepared for use on perishable medical items that require special handling en route. MIL-STD-129, Marking for Shipment and Storage; these labels contain a record of initial icing, re-icing, and the inspection deadline. Each en route transfer station will inspect the record of icing and re-icing. If the next icing becomes due before the shipment arrives at the next transfer point or destination, the shipment will be re-iced before it is forwarded.

(a) Handling whole blood. Whole blood is given careful consideration and expeditious handling at all times because it must be preserved by proper refrigeration from the time it is collected until it is administered and because of its limited usable period of 21 days. Whole blood containers must be kept right side up and without damage to the exterior. Standard refrigeration containers hold 24 pints and enough chopped ice to provide adequate refrigeration for 24 hours. The containers are precooled to between 39° and 50°F before they are filled with blood. Approximately 19 pounds of chopped wet ice are used for the ice container.

WARNING

Dry ice or salt wet ice will not be used for icing whole blood containers. Do not freeze water in polyethylene bags.

(b) Shipment of whole blood. Whole blood containers are sealed before shipment. They should be loaded in aircraft which provide an in-flight temperature between 39° and 80°F. Whole blood should never be loaded in the belly compartment of the aircraft if freezing temperatures are likely to be encountered in flight.

WARNING

Blood must never be allowed to freeze. When blood is to be en route over 24 hours after it is iced, arrangements will be made for re-icing at en route stations. Normally, the shipment should be turned over to the local medical unit for re-icing. If this is not feasible, traffic personnel will re-ice the blood containers.

(3) *Protected cargo.* Valuable items, firearms, and security shipments are given special care to prevent them from being lost or stolen. These shipments represent a high value and can easily be converted into cash. Items falling in this category are certain drugs, narcotics, intoxicating liquors,

maps, precious metals, currency, watches, jewelry, cameras, and similar valuables. Shipments of money or bullion are transported on a hand-to-hand basis.

(4) *Hazardous materials.* Hazardous material will be packaged, packed, marked, labeled, and properly prepared for transportation in accordance with AFR 71-4/TM 38-250/NAVSUP PUB 505 (REV)/MCO P4030.19/DLAM 4145.3 and MIL-STD-129, Marking for Shipment and Storage. The aircraft commander must be given a briefing on the nature and characteristics of these materials as required in the above referenced document.

(5) *Human remains.* Normally, human remains are transported on cargo flights. Human remains that are properly embalmed may be transported in a human remains pouch if it is placed in an inside container. Shipments of this nature must have affixed to the outer container a certificate executed by a licensed mortician that the remains have been properly embalmed according to U.S. standards. Human remains are not delayed or off-loaded en route except in case of extreme emergency. These shipments are delivered to the receiving individual or agency as soon as they arrive at their final destination.

(6) *Birds and animals.* Transportation of birds and animals on military aircraft is prohibited, except for scientific, educational, or military purposes. The movement of birds and animals is subject to the provisions of the directives pertaining to the quarantine of plants, animals, and their products.

NOTE

Pet animals are not transported on military aircraft unless they are authorized for movement by the Chief of Staff, USAF.

(7) *Frustrated cargo.* Frustrated cargo is that which is delayed or interrupted in shipment because of lack of space, change in requirements, unknown disposition or other reasons. Cargo may be frustrated due to improper *or* insufficient packing, incorrect or improper markings, incorrect documentation and certification, lack of consolidation, etc. Frustrated cargo requires special handling prior to onward movement. Check appropriate base directives and correct deficiencies. The following situation is cited for information and guidance:

e. During a recent exercise, two pieces of outsized cargo were delayed at a MAC aerial port for an unacceptable length of time. Subsequently, it was determined that this shipment could have been repackaged in smaller containers and shipped as normal cargo, with little or no delay.

f. Other than the C-5, MAC has relatively few aircraft with an outsized capability greater than a C-141 and few can be obtained from commercial carriers. Consequently, shortages of this capability frequently develop. In order to preclude unnecessary delays of MAC shipments, packaging personnel are requested to package items so that they will be compatible with 463L pallets, whenever possible. In addition, items should be disassembled if they are too large to fit in a C-141 aircraft. If this is not possible, or if the cost of doing so would be prohibitive, shippers should consult with the Military Airlift Clearance Authority (MACA) at the aerial port to determine the optimum course of action to meet the required delivery date. The dimensions of cargo which can be carried in a C-141 aircraft are published in MAC regulation 55-4 (C-141B Configuration Mission Planning or TO 1-C-141B-9 Loading Instruction). Personnel concerned with preparation of shipments for movement by MAC are cautioned that excessive packaging which expands cubical measurements into outsized configurations may well invite cargo frustration as well as unnecessary delays and thereby defeat planned efforts designed to assure delivery within requirements of the end user.

2-13. Aircraft Loading and Packing Requirements

a. Packing personnel engaged in preparation of material for airlift should have a knowledge of the packing problems that are associated in loading and tying down cargo aboard cargo aircraft. Consideration should be given to the characteristics of the aircraft, (USAF Specification Bulletin 518) involved and the loading requirements of the cargo. Paragraph 2-11 describes some of the materials-handling equipment utilized in handling cargo. This paragraph is designed to point out some of the factors involved in load planning and loading of cargo aircraft, including determination of the center of balance, and devices utilized in securing cargo aboard the aircraft.

b. Load Planning. Planning a load for an aircraft with several thousand pounds of cargo is difficult because load planning must be precise and exact. This is a complex and highly specialized task requiring trained personnel. The degree of load planning will vary with each flight, depending upon the type of cargo being handled. Actually, there is no best method or procedure for load planning, but the following factors must be considered at all times when planning an aircraft load:

(1) Destination, service, priority, and date of receipt.

(2) Intransit channel traffic and originating cargo.

(3) Aircraft center of gravity.

(4) Aircraft weight and balance factors.

(5) Cargo size limitations.

(6) Cargo size charts.

(7) Shoring requirements.

(8) Restraint criteria.

(9) Compartment zoning.

(10) Treadway load restrictions.

(11) Typical vehicle load information.

(12) Special cargo loading procedures.

NOTE

Items (1), (5), (6), (10), and (12) above are associated with packing for airlift.

c. Packing Considerations. (1) through (6) below contain areas that packing personnel should consider when preparing material for airlift. These areas show the relationship between the load planner and packing personnel.

(1) *Aircraft floor strength limitations.* Each cargo compartment floor is limited as to the amount of weight per square inch or square foot it can carry. These limits vary from approximately 44 pounds per square foot to 100 pounds per square foot, and cannot be exceeded without damage to the floor. The limits for a particular type of aircraft, will be found in the applicable technical order. Example: TO 1C-141A-9. Shoring may be used to distribute loads over a larger area, thus bringing the floor load within allowable limits. In some instances the use of shoring presents problems to the loadmaster. Where possible, packing personnel, by using skids with a reasonable large bearing area, can contribute to ease of loading and handling throughout the logistics system.

(2) *Aircraft compartment limitations.*

(a) Dimensional limitations. The dimensions of the cargo compartments must be known to determine the size limits of cargo that may be placed in each compartment. The compartment method of loading is used when loading general cargo in an unpalletized condition.

(b) Weight limitation. Each compartment has a weight limitation. The compartment of any cargo aircraft may be loaded to its designed capacity as long as the allowable load of the aircraft is not exceeded. Exceeding the weight or dimensional limitations will cause avoidable time-consuming delays or could result in dangerous flight characteristics for the aircraft. For this reason, it is essential that weight and dimensions be accurately marked on containers.

(3) *Aircraft weight and balance.* In order to fully understand how weight and balance affect packing, it is necessary to refer to weight and balance data (TO 1-1B-40). The need for aircraft weight and balance cannot be overstressed. Many aircraft, together with their crews, have had difficulty because weight and balance had either been neglected or incorrectly computed and marked. Exceeding recommended weight and balance limits can result in such factors as increased takeoff distance, decrease in structural safety factors, and decrease in range.

(4) *Center of Gravity range.* An aircraft can be balanced in flight with its CG (center of gravity) anywhere within certain limits by operation of the trim tabs and the elevators. Location of the CG outside these limits results in unsatisfactory or dangerous flight characteristics for the aircraft. These limits are referred to as C range, and its location, always near the forward part of the wing, is specified for each model aircraft either in inches or percent of Mean Aerodynamic Chord (MAC). Obtaining balance within the CG range is merely a matter of distributing the load so the CG of the loaded aircraft is within the specified CG range. This is the job of the loadmaster.

(5) *Importance of weight and balance.* An aircraft, in order to be safely flyable, must balance within the CG range. This CG range is very small when compared to the length of the aircraft. For example, a C-130's CG range is only about 23 inches (from prohibitively nose-heavy to prohibitively tail-heavy). Of these 23 inches, only about 5 inches constitute the optimum range within which the entire aircraft should balance.

(6) *Weight and balance markings.* When calculating weight and balance of an aircraft and its load, the loadmaster may depend heavily upon weight and balance markings that appear on containers. Since as little as 5 inches can constitute the CG range of the aircraft, it should be obvious to even the layman what danger can result from incorrect weight or balance markings on shipping containers and equipment.

2-14. Cargo Tiedown Devices

Cargo tiedown devices are used to secure cargo in the aircraft. These restraining devices are critically necessary, especially during extreme gravitational forces and turbulences to which the aircraft may be subjected.

a. Three basic tiedown devices. The (1) MC-1 device has a 10,000 pound capacity, (2) the MB-2

has a 25,000 pound capacity, and (3) the CGU-1/B has a 5,000 pound capacity. MB-1 and MB-2 devices have a heavy hook which is engaged with the ring, as shown in figure 2-7.

(1) The MB-1 and MB-2 devices are used with the same type of hooked chain but are devices that have a quick-release feature which makes it of the tension on the chain. The MB-1 and MB-2 devices have knurled rings (tensioning collars) which are turned to tighten the tiedown chain. The MB-1 device is rated at 10,000 pounds. The MB-2 device has a 25,000 pound capacity and is distinguished from the MB-1 by its locking "Keeper bar" which spans the mouth of the hook.

(2) The CGU-1/B is installed by hooking the stationary hook on the end of the strap to one of the tiedown fittings. The other end is passed over the cargo and the movable hook is hooked into another tiedown fitting. The strap is tightened by pulling the free end through the pretension bar which automatically locks in place. The CGU-1/B tiedown device is removed by depressing the release bar as shown in figure 2-7.

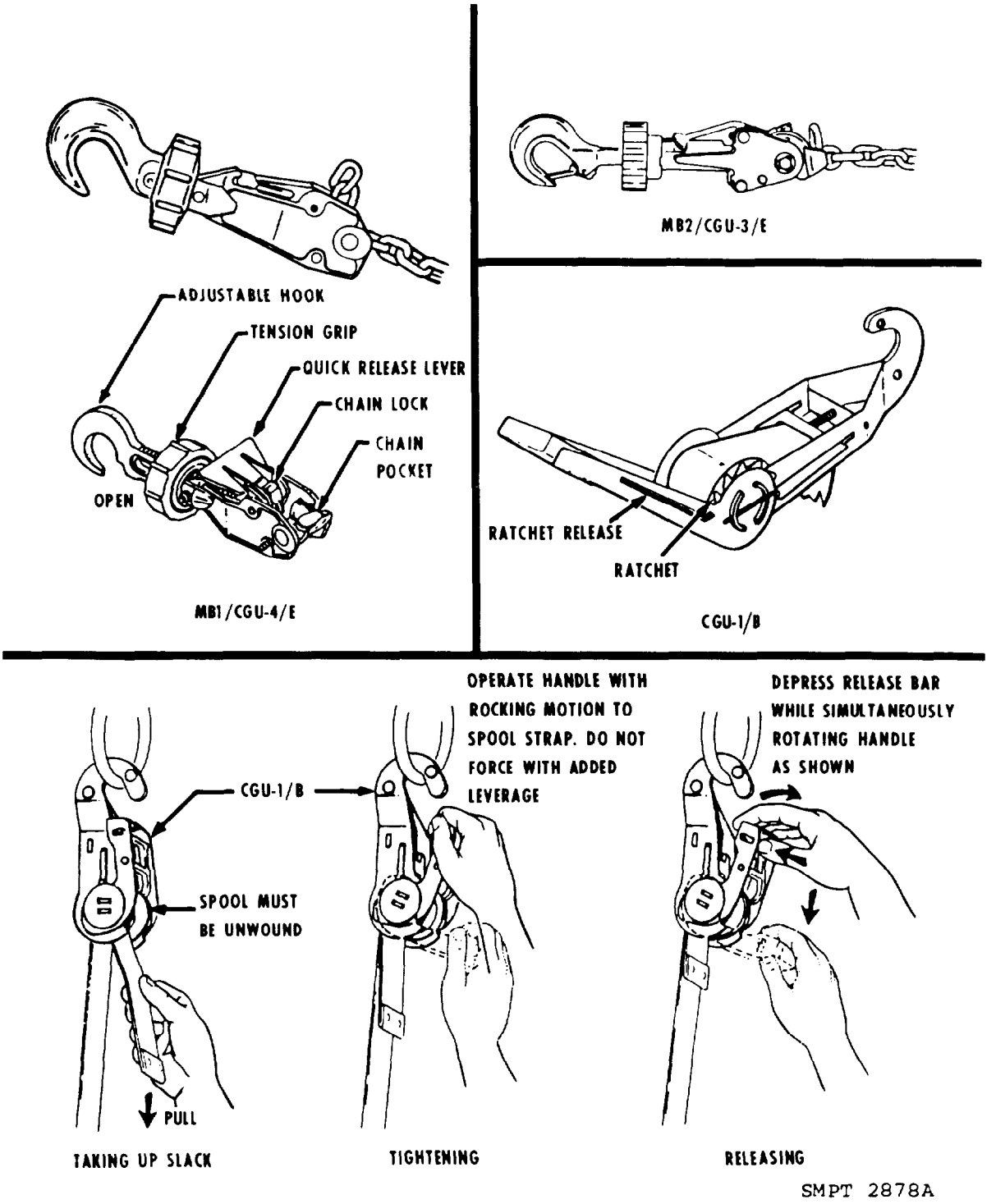

Figure 2-7. Cargo Tiedown Devices: MB-1, MB-2, and CGU-1/B.

b. Cargo Tiedown Fittings. There are two types of cargo aircraft fittings which are permanently installed on the aircraft floor . . . the 10,000-pound fittings and the 25,000-pound fittings. The following are examples of tiedown fittings found on a few aircraft:

(1) The C-130 has permanently mounted 10,000-pound fittings on a 20-inch grid pattern.

Two 25,000-pound fittings can be installed just forward of the ramp hinge.

(2) The C-141B uses 10,000-pound and 25,000-pound fittings which can be installed throughout the aircraft floor on a 20-inch grid pattern. The C-141B also has a 25,000-pound combination fitting used with the 463L rail system.

(3) The C-5 has only 25,000-pound fittings which are permanently mounted to the floor.

(4) The 5,000-pound tiedown fittings, another type, are installed on the ramp and sidewalls of the aircraft's cargo compartment.

c. Restraint Criteria. Cargo in the aircraft is subjected to forces resulting from rough air, accelerations, rough landings, crash landings, extreme altitudes, and decelerations. Cargo has a tendency to move forward when the aircraft is suddenly slowed. Other forces tend to move the cargo aft, to either side (laterally), or up from the cargo floor (vertically). The amount of restraint needed to keep cargo from moving in a specific direction is called restraint criteria. Restraint criteria, including minimum restraint forces, palletized load restraint, and techniques of applying restraining devices are found in the applicable technical order covering each aircraft. An example is: TO 1C-141B-9, Cargo Loading, which is applicable for the C-141 aircraft.

CHAPTER 3

PACKAGING FOR AIR SHIPMENT

3-1. Explanation of Terms

a. For the purpose of this manual, the following definitions will apply:

(1) *Containerization.* The use of transport containers, such as, military-owned demountable containers (MILVANS), commercial or Government-owned (or leased) shipping containers (SEAVANS), and roll on/roll off (RORO) trailers to unitize cargo for transportation, supply, and storage. Containerization aids carriage of goods by one or more modes of transportation without the need for intermediate handling of the contents. Containerization incorporates supply, security, packaging, storage, and transportation into the distribution system from source to user.

(2) *Exterior pack.* A container, bundle, or assembly that is sufficient by design and construction to protect unit and intermediate packs and contents during shipment and storage. This can be a unit pack or a container with any combination of unit or intermediate packs.

(3) *Industrial packaging.* The materials and methods used by a supplier to meet the requirements of the distribution systems serving both DOD and industrial consumers.

(4) *Intermediate pack.* A wrap, box, and bundle that contains two or more unit packs of identical items.

(5) *Marking.* Application of numbers, letters, labels, tags, symbols, or colors for handling or identification during shipment and storage.

(6) *Military packaging.* The materials and methods prescribed in Federal or military specifications, standards, drawings, or other authorized documents designed to provide the packaging necessary for the prescribed level of protection.

(7) *Packaging.* The processes and procedures used to protect materiel from deterioration, damage, or both. It includes cleaning, drying, preserving, packing, marking, and unitization.

(8) *Packing.* Assembling of items into a unit, intermediate, or exterior pack with necessary blocking, bracing, cushioning, weatherproofing, and reinforcement.

(9) *Preservation.* Application of protective measures, including cleaning, drying, preservative materials, barrier materials, cushioning, and containers when necessary.

(10) *Reusable container.* A shipping and storage container that is designed for reuse without impairment of its protective function. A shipping and storage container that can be repaired, refitted, or both to prolong its life or to adapt it for shipment of items other than that for which it was originally intended.

(11) *Unit pack.* The first tie, wrap, or container applied to a single item, or a quantity thereof, or to a group of items of a single stock number, preserved or unpreserved, that constitutes a complete or identifiable package.

(12) *Unitization.* Assembly of packs of one or more line items of supply into a single load so that the load can be handled as a unit through the distribution system. Unitization (unitized loads or unit loads) encompasses consolidation in a container, placement on a pallet or load base, or securely binding together.

3-2. Preservation

a. This term has been defined in paragraph 3-1(9). Whether or not the shipment is destined for surface or air transport, all military items shall be afforded the degree of preservation and packing required to prevent deterioration and damage during shipment, handling, and storage. The preservation requirements are usually the same whether the shipment is destined for air or surface shipments.

NOTE

For detailed requirements on preservation refer to Vol. I of DLAM 4145-2/TM 38-230-1/AFP 71-15/NAVSUP PUB 502, Rev/MCO P4030.31, PACKAGING OF MATERIEL PRESERVATION

3-3. Packing for Air Shipment

a. While packing for air shipment requires special consideration in regard to weight, cube, and other factors, the protection provided must be that required by the material being shipped not only for the air leg but also for any surface movements.

3-4. The Importance of, and Need for Packing

a. The pack alone cannot always provide full protection for military items. Items must be properly braced, blocked, anchored, or cushioned in the exterior container to provide adequate protection. The pack is often blamed for damage to its con-

tents when the cushioning, blocking, bracing, or anchoring are at fault, as shown in figure 3-1. Every packing operation must be carefully planned and executed to ensure that the contents will arrive at the destination in a usable condition. Military supplies and equipment must be protected against hazards due to force and exposure until they reach their final destination and are placed into actual use or service.

b. The objective of packing is to extend the life of an item so that depreciation does not start until the item is placed into service. In military packing, the primary goal is to provide the necessary protection at a minimum cost. Some of the factors preventing the protection of packing are as follows:

(1) *Damaging Forces.* Damage results from hazardous forces encountered in transportation, handling, and storage. Transportation hazards involve forces encountered through rail, truck, sea, or air shipment; damage results from abrupt starts and stops or from vibration and jolts. Handling forces are those received through loading, unloading, and handling during storage operations. Damage often occurs during manual handling, forklift truck handling, grabhook use sling loading, and conveyor loading, as a result of dropping, puncturing, crushing, wracking, and smashing of the pack. Storage forces are those resulting from the crushing effects of superimposed loads through stacking.

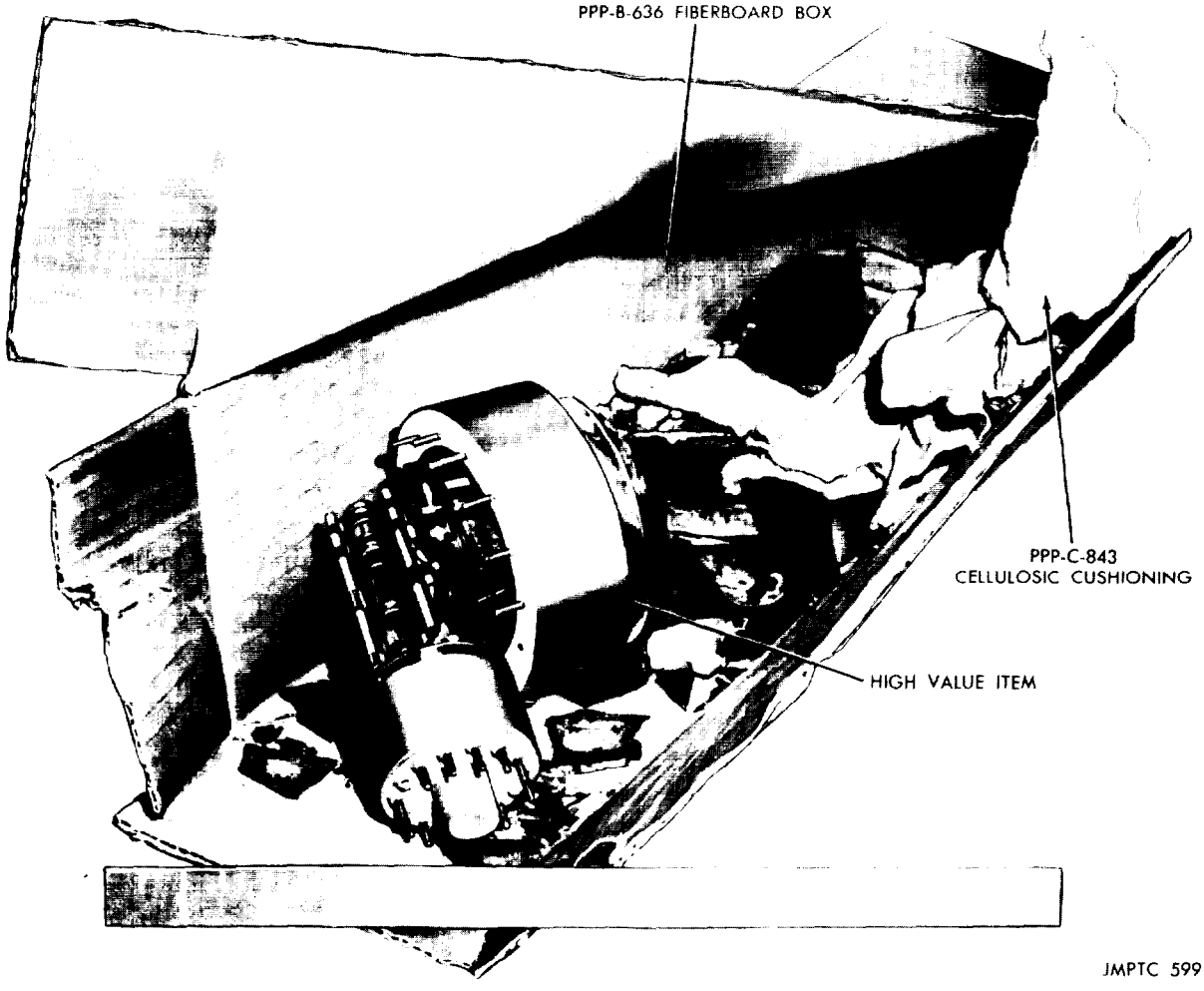

Figure 3-1. Item damaged as a result of inadequate packing.

(2) *Environmental Hazards.* Exposure to different climatic conditions and weather hazards, such as high humidity, rain, salt spray, extreme cold, dry intense heat, and the cycling of these weather conditions, tend to accelerate the breakdown or deterioration of unprotected items. Water in its various forms is the main damaging factor in climatic exposure.

(3) *Methods of Counteracting Hazards.* Items which are packaged properly will resist the damaging effects of force and exposure. Force is counteracted by using rigid shipping containers, immobilizing the item within the container through blocking and bracing, damping forces through the use of cushioning material, and reinforcing shipping containers with strapping. Exposure is counteracted by using water-resistant shipping containers and waterproof and water-vaporproof barrier materials in their various applications.

3-5. Packer's Responsibility

As military equipment includes a wide range of items varying in size, shape, weight, fragility, and composition, and because consideration must be given to the individual characteristics of each item, the instructions furnished herein must be interpreted and applied with sound judgment. It is the packer's responsibility to study the item thoroughly in order to determine how best to give adequate protection with the least tare weight. This study must include the problems involved in handling, stowing, and tying down cargo in the aircraft. Whenever possible, the item should be packed or prepared so that no unusual tie downs are required and so that it can be stowed in the aircraft without a waste of space.

3-6. Study of the Item Characteristics

The item to be packed is normally serviceable or repairable. If the item is serviceable, it should be packed so that it will remain serviceable. If repairable, the item deserves the same degree of care and should be protected against further damage which might result in additional repairs.

a. Size and Weight. These characteristics are important in influencing the kind of container to be used (type, grade, class, etc.) and whether or not the item is to blocked, braced, cushioned, or anchored. A large item may require more extensive blocking, bracing, cushioning, or anchoring than a smaller one. In studying the item, consider the weight distribution with respect to the size of the bearing area. If the weight is concentrated, it may be necessary to distribute it over a larger area. See chapter 9 for detailed requirements on blocking, bracing, cushioning, and anchoring.

b. Shape. The shape of the item will dictate whether or not the item requires blocking, bracing, cushioning, or anchoring. A determination can be made as to the amount and type of cushioning, blocking, bracing, or anchoring required to protect the item within the container. When the size of the item is excessive and the use of a container is not deemed advisable, it may be necessary to provide protection to delicate parts to prevent damage from physical and environmental hazards in storage and in transit.

c. Strength and Fragility. The strength and fragility of an item will influence the amount and type of physical protection required. This protection may be applied to an item within a container or to an item mounted on a skid. Below is a classification of items according to their ability to withstand impact without damage.

(1) *Rugged.* This classification is given to items if they can withstand impact without damage. These items can be blocked and braced rigidly. Cushioning is sometimes used on these items to prevent surface abrasion.

(2) *Semifragile.* An item falling into this classification can withstand a limited amount of impact without damage. Usually, this type of item is fastened to the base of the container to prevent movement and shock to the item.

(3) *Fragile.* Fragile items are those that can withstand very little impact without damage. If an item is fragile, the interior of the pack must be designed to provide sufficient cushioning to absorb the shock to which the item may be subjected. When testing facilities are available, the pack should be tested in accordance with applicable military or Federal standards on testing procedures.

(4) *Flexible and rigid items.* Flexibility refers to both the coilability of the item and the need for methods of handling. Flexible items may be formed into coils, folded, or rolled to provide a means for handling. Examples are chains, cable, and tires. Rigid items are so constructed that force must be exerted to change their shape, but once subjected to damaging forces, they may be permanently damaged or deformed. Examples are aircraft wings, ailerons, fuel tanks, and canopies.

d. Types of Loads. The term "type of load" refers to the physical characteristics of the item, including the nature of the item as it contributes to the support of, or damage to, the container. The selection of the shipping container to be used is influenced by the type of load. To aid in this selection, the various loads have been classified as type

1 (easy load), type 2 (average load), and type 3 (difficult load) as shown in figure 3-2.

(1) *Type 1 or easy load.* The load is a single item or single interior container which provides complete and uniform support to all faces of the shipping container. The contents are of moderate density and relatively sturdy.

(2) *Type 2 or average load.* The load is composed of more than one item or interior container which give some support to all faces of the shipping container. The contents are of moderate density and relatively sturdy.

(3) *Type 3 or difficult load.* This load gives little or no support to the shipping container. The contents can be extremely heavy, very fragile, very irregular in shape, bulk materials which are free to shift and flow, or a combination of several of these factors.

e. Mode of Transportation. The mode of transportation is an important factor in determining the packing requirements. The common hazards associated with handling and shipping will vary among rail, truck, ship, or aircraft. As an example, there could be considerable difference in the amount and kind of handling an item received when it is transshipped from rail to truck to ship, and the amount and kind it receives when it is delivered by airlift. Likewise, an item to be delivered by airdrop requires more protection than one delivered by truck.

f. Destination. The ultimate destination of items may be known or unknown at the time of packing or prior to entering the transportation system. Some items may be used domestically while others will eventually go overseas. They may be shipped to arctic or tropical regions. They may be subjected to the cold, heat, humidity, aridity, or the extreme temperature changes of various geographical areas, all of which must be considered in planning the pack.

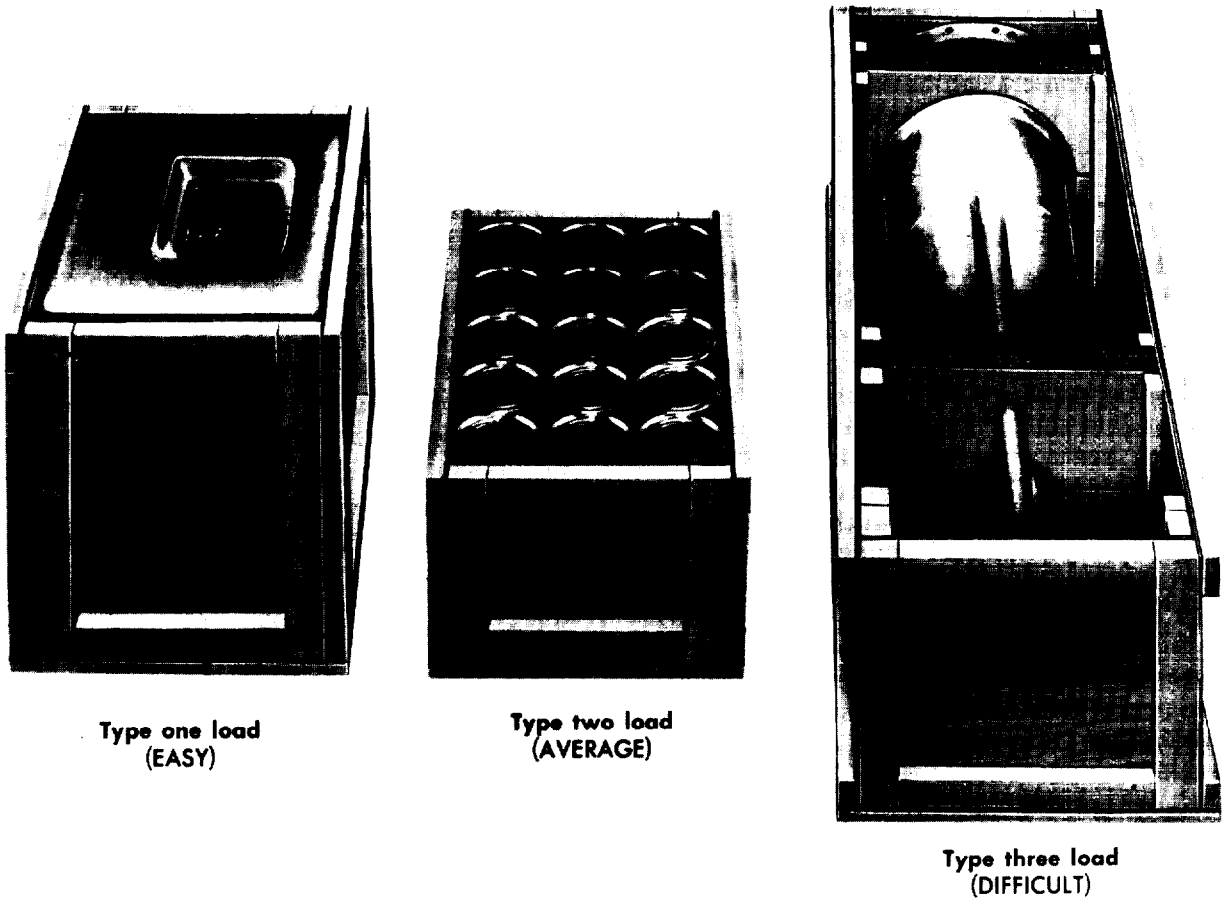

Figure 3-2. Types of loads.

(1) The selection of the shipping container will vary depending on whether the destination is domestic or overseas. The levels of packaging will also be used in selecting the appropriate container.

(2) The container selected must comply with freight and other regulatory publications because they govern the construction of shipping containers and set forth the procedures for packing, loading, and shipping by common carriers.

g. Availability of Mounting Provisions. Frequently it is possible to utilize brackets or bolts in the base or other design features of the item for mounting it within the container. Mounting facilities should be evaluated to determine whether or not they are adequate.

h. Disassembly. Disassembling of an item to reduce the size of the pack and to simplify preservation and packing of the various components should be thoroughly investigated. However, before disassembling any equipment, competent advice should be obtained as to the feasibility of reassembly and calibration, if necessary, in the field.

CAUTION

Proper authorization must be obtained before disassembling any portion of an item that would require technical skills or special tools to reassemble. Disassembly of simple-to-remove components, such as handles, wheels, etc., requiring standard tools, do not need authorization.

i. Special Container Requirements. Reusable or specifically designed containers have been developed for specific items and should be considered for use. Containers in this category are usually subject to special requirements when packing the contents in the container. As an example, in reusable containers the cushioning, blocking, bracing, or anchoring must be arranged so that it may be

easily removed, and when replaced, it must protect the contents adequately. Utilization of reusable containers should be considered when fragile or hard to pack items are to be shipped on a repetitive basis. Containers can be returned economically, and their use will result in reduced tare weight, cube, and cost.

3-7. Sequence of Packing Operations

a. If specific packaging requirements exist for a given item, packing personnel will follow these requirements. These packing requirements may be in the form of specifications, standards, packaging control forms, packaging engineering specification cards, packaging and packing control records, or packaging data sheets. Each service may issue implementing instructions in various forms such as technical manuals, technical orders, bureau publications, or service manuals which aid in accomplishing military packing. Packing operations may include some or all of the steps indicated in a through h below. The sequence of operations need not be in the exact order given. Only accepted general principles are outlined herein. Performance tests must be used to determine the adequacy of the pack when the principles are applied to packs for specific items.

b. Determining Packing Requirements. In the absence of packing requirements, a thorough study must be made of the item to be packed to determine the best way to provide it with the necessary protection at minimum cost. Factors to be considered include size, weight, and shape of the item, mounting provisions, strength and fragility, type of load, destination, mode of transportation, and the conditions known or expected to be encountered during shipment, handling, and the storage life cycle of the item.

c. Exterior Shipping Container. The shipping container to be selected and used may be spelled out by authority, specifications, or technical orders. In instances where a group of containers is authorized or when the container is not specified, the responsibility of container selection is then determined by you, the packer.

d. Container Selection. The following factors should be considered in selecting containers:

(1) Destination—domestic or oversea.

(2) Mode of transportation.

(3) Physical characteristics of the item(s), such as weight, size, shape, and fragility.

(4) Type of load.

(5) Initial cost of the container.

(6) Weight and cube of the container.

(7) Simplicity and economy of assembly.

(8) Availability of the container.

(9) Reusability of the container.

e. Types of Containers. Containers available for use are generally fiberboard boxes, cleated panel boxes, modular containers, skid bases, pallets, reusable containers, designed containers for repairable parts, crates, etc.

f. Blocking, Bracing or Cushioning. To assist in determining whether an item has to be blocked and braced and/or cushioned, the following factors have to be carefully considered: the shape of the item; its size, weight, and shock resistance; lack of availability of mounting provisions; degree of disassembly permissible or feasible; and the type of load the item represents. The necessities for blocking, bracing, and cushioning are listed below:

(1) Containers are often subjected to rough handling during shipment and transportation. If the items packed therein are free to move or if they are not properly protected against repeated shocks, jolts, and vibration, the end result might be damage or complete loss.

(2) Military situations demand that items be packed to withstand all possible hazards encountered in transportation. This includes proper blocking, bracing, and/or cushioning to ensure due stability of the contents.

g. Weatherproofing. Weatherproofing, when necessary, is providing protection with a barrier. Weatherproofing can be accomplished in five ways: case liner, an interior wrap, a crate liner, a shroud, and a temporary tarpaulin. The protection provided depends upon the kind of barrier and the way it is used. A barrier material conforming to specification PPP-B-1055 is often used to weatherproof a pack. This waterproof barrier is primarily intended to prevent deterioration of the items and the preservation materials used to protect the articles by excluding entry of free water or by diverting water from materials which are subject to water damage. In addition, it will afford protection from dust, dirt, and other foreign matter. PPP-B-1055 will not be used when the interior packs are already waterproofed, nor when asphaltum in the barrier materials or sealouts would be injurious to the enclosed articles. Weatherproofing is accomplished by other barrier materials such as MIL-B-121, L-P-378, and MIL-B-131.

h. Strapping. Each military container specification has a section or appendix devoted to requirements for strapping exterior containers. It will cover the strapping requirements for various containers as they are discussed throughout this part of the manual.

i. Marking. Proper marking, according to MIL-STD-129 marking for shipment and storage of Military supplies is a must for identification and handling during shipment and storage. Marking is used to speed up the movement of shipments without confusion and delay, and to permit ready identification of contents either at transshipping points or at the destination. No matter how well an article is made or packed, it is valueless if it cannot be identified upon reaching its destination.

WARNING

The agency offering cargo for air shipment is responsible for marking each item of cargo and all vehicle type cargo with the correct gross weight and a center of balance point as follows: Any item measuring 10 feet or longer; any item having a balance point at other than its center and in addition, vehicle type cargo having a load carrying capability will be marked indicating any empty or loaded center of gravity, as appropriate. Items not marked as outlined above will not be accepted for airlift, as unknown weight/CG presents an unsafe condition relative to airplane weight and balance. For loads that span more than one pallet, the weight should be presented in terms of weight per each pallet. If this is not possible, the combined weight will be provided and the calculated CG will be marked on the shipment. If these marking procedures are not carefully followed, it may result in personnel injury or loss of life

3-8. Packaging Materials

a. Most of the commonly used packaging materials are adhesives, bags, sacks and envelopes, barrier and wrapping materials (opaque and transparent), cushioning materials, desiccant, humidity indicator, inspection windows, labels, and tapes. In addition to the packaging materials, one cannot eliminate the various containers and devices outlined in chapters 4, 5, 6 and 7. A general knowledge of the composition, characteristics, intended uses, and methods of application of packaging materials is very important when preparing materials for airlift. All materials used must perform according to the standards required of military packages. Unauthorized or arbitrary selection and use of materials should be discouraged at all times. Their procurement and distribution should be based on requirements as established in Government specifications and on the needs of the various services.

3-9. Storage Facilities

a. To assure serviceability of the contents after prolonged exposure to deteriorating elements, not only the supplies but the packing materials which enclose them must be protected. There may be a considerable period from the time the material leaves the manufacturer until it is used. It may be stored outdoors in domestic depots, then shipped to staging areas or ports of embarkation to await transportation overseas.

b. Finally arriving, it may again be stored in depots or supply dumps which could be improvised shacks, native huts, tents, caves, or even in the open. At oversea supply points, the packs are often broken open and small intermediate packages distributed to forward areas. If this is the case, it is recommended to overpack small intermediate packages. In this latter case, the protection provided by the pack could be considerably reduced from the amount required for the oversea pack.

3-10. Shipping Containers Utilized in Packing for Air Shipment

a. Containers utilized in the preparation of freight for air shipment may be categorized into special lightweight containers (containers specifically suitable for air shipment) and general purpose shipping containers. Representative examples are fiberboard boxes, cleated panel boxes, consolidation containers, skid assemblies, and crates. Detailed information concerning containers will be found in the appropriate section of The Packaging Manual, Vol. I or II. Criteria utilized in selecting containers suitable for airlift will be treated later in chapter 8.

3-11. Reduction of Weight and Cube

The reduction of weight and cube cannot be overemphasized. A good airpack has a minimum of tare weight and cubic volume. Exterior packing should be strictly limited to what is actually required for physical protection of the item in transit.

a. Weight Reduction. Since the preservation requirements are the same for both surface and air transportation, weight reduction will be accomplished in the pack, i.e., exterior shipping container.

b. Cube Reduction. Consistent with the requirements for weight reduction, cubic displacement is also important. Any increase in weight and cube, particularly weight, will greatly increase the unit cost of airfreight.

3-12. Relation of Packing to Air Terminal Operations

Materials packed and destined for oversea use should be compatible with air terminal facilities. The terminal may be mechanized for handling a large volume of aircraft, or nonmechanized, where relatively few aircraft are processed. Air terminals will vary in size and facilities for handling material shipment. Many of the air terminals are equipped with the latest materials-handling equipment, designed for use with the unit load concept.

a. Size of Item or Unitized Load. The maximum size of container that most mechanized terminal lines will handle is 40 by 40 by 48 inches. Personnel should have a knowledge of the maximum size that can be handled by all mechanized terminal operations. The size of item that may be accepted is also limited to the dimensions of the cargo doors of the aircraft used. (Refer to MIL-HDBK-318.) Unitized loads will not exceed 104 by 84 by 48 inches.

b. Weight. The weight of the item to be shipped must be well distributed to prevent damage to the container and the floor of the aircraft. Most mechanized-line operations will handle 350 to 400 pounds.

c. Special Characteristics of Cargo. Cargo at any terminal includes certain items that, because of their bulk or weight, cannot move conveniently through normal channels. Such cargo may be divided into the following classes:

(1) *Oversized cargo.* That cargo which cannot conveniently move through the normal materials-handling system within the terminal.

(2) *Outsized cargo.* This type or cargo not only has the features of oversized cargo but, in addition, because of its size, is not suitable for movement in any aircraft of the logistics fleet and will be diverted to other modes of transportation.

CHAPTER 4

SPECIAL PURPOSE LIGHTWEIGHT CONTAINERS

4-1. General Characteristics of Lightweight Containers

This chapter covers special lightweight containers for consolidation of bulk materials, and containers designed for specific items.

a. Special purpose lightweight containers are those containers having the inherent advantages of low tare weight ratio (i.e., the ratio of the weight of the container to the weight of the contents), flexibility, versatility, reusability, ease of handling, small required storage space, and low cost of materials. Included in this category are kraft paper envelopes, mailing tubes, cloth, textile and plastic bags, paperboard boxes, drums, barrels, kegs, and metal containers.

b. All of these containers have different characteristics. In some instances, these containers are not waterproof; therefore, the item packed must be properly protected by preservative treatments, when such is required. (Refer to DLAM 4145.2/TM 38-230-1/NAVSUP PUB 502/AFP 71-15/MCO P4030.31 for details on preservation and packaging requirements.) When more than one lightweight shipment is bound for the same account number, packaging will be limited to the unit package and consolidation into fiberboard or other lightweight consolidation containers will be effected. (See para 5-3*a* for exceptions to consolidation.) Consolidation may also be accomplished by tying or bundling several packs together with strapping or filament-reinforced tape.

4-2. Kraft Paper Envelopes

a. Kraft paper envelopes (fig 4-1) may be used as containers for air shipment of small articles not weighing over 5 pounds. Ordinary kraft paper envelopes have little water resistance and will provide very little physical protection to the item. They are useful for packing flat articles, such as publications, data plates, and other items that will not be easily damaged by rough handling. Spare parts should not be packed in these containers if susceptible to damage. For items falling into this general category, but requiring cushioning or weatherproofing, paper cushioned sacks should be used. Whenever possible, these envelopes should be consolidated when shipped to the same destination. Envelopes are light in weight, easy to pack and mark, and economical for use. Kraft paper envelopes may be closed by means of adhesives, staples, or tape.

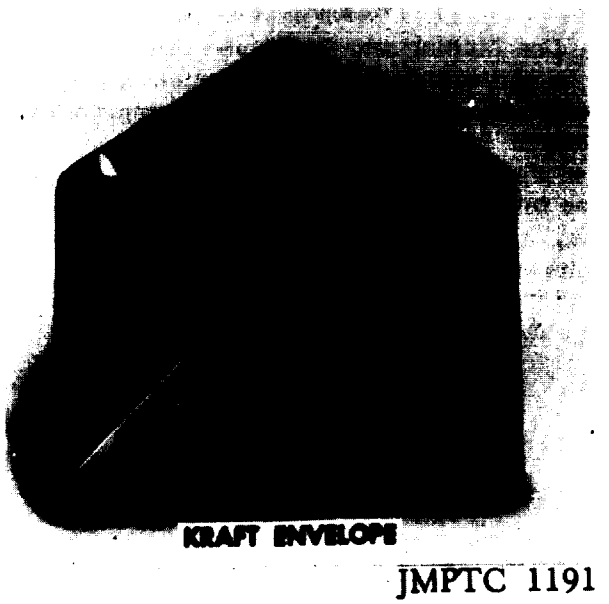

Figure 4-1. Kraft paper envelopes.

4-3. Mailing and Filing Tubes (PPP-T-495)/(Commercial Item Description, A-A-865)

This specification covers the requirements for new paper chipboard and waterproof mailing, filing, and map storage tubes which may be spirally or convolutely wound. Figure 4-2 illustrates how paper items such as maps may be placed into these tubes. Additionally, they may be treated to resist moisture absorption.

a. Classification is as follows:

(1) Type I. Untreated.

(2) Type II. Waterproof treated.

(3) Class 1. Spirally Wound.

(4) Class 2. Convolutely wound.

(5) Style A. Plain, no closure.

(6) Style C. Metal screw cap with crimped bottom.

(7) Style D. Three piece telescope with metal ends. Styles A, C, and D (class 2) are shown in figure 4-3.

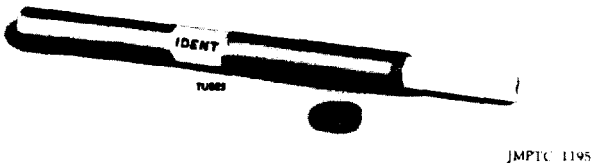

Figure 4-2. Mailing and filing tube (PPP-T-495)/(Commercial Item Description, A-A-865).

b. Use. Mailing and filing tubes are suitable for use as unit containers in the shipment and storage of maps, blueprints, or other similar items of limited length. In addition, they are used to pack metal rods, piping, and other denser items. The use of these tubes, in some instances, will require cushioning and internal strengthening by the use of splints or stiffeners.

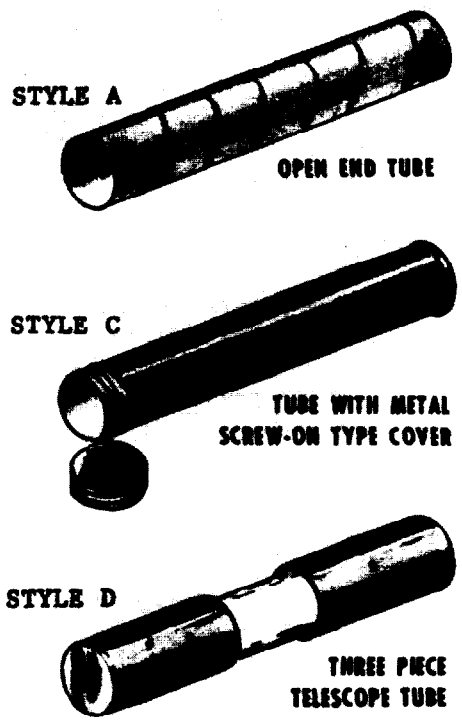

Figure 4-3. Styles of mailing and filing tubes (PPP-T-495)/(Commercial Item Description, A-A-865).

(1) When additional stiffness is required, splints may be placed lengthwise of the tube, either on the inside or outside of the tube, and fastened in place by blocking or strapping.

(2) There is no weight limit cited in the PPP-T-495 specification, or the CID, A-A-865, however the best engineering estimate is 5 pounds, as noted in the chart of figure 8-1 placed in the back of this manual.

(3) These tubes range in size (inside diameter) from under 1 inch through 10 inches and the diameter varies with the types and styles given in the specification.

c. Weatherproofing. Tubes may be procured with special liners of cellophane, greaseproof paper, special spray treatments, or asphalt coatings. These treatments make the tubes capable of carrying oily or greasy materials or any other materials requiring this type of protection.

d. Closure. Closure depends upon the style of tube.

(1) *Style A.* Materials, such as rolls of paper, maps, and others that conform to the sides of the tube, may be closed with kraft paper tucked into the ends or with tape applied over the ends. Either technique will make an effective closure. This style is shown in figure 4-3.

(2) *Style C.* This is closed with a screwcap which may be either metal or plastic, as illustrated in figure 4-3.

(3) *Style D.* Closure is effected through the use of metal or plastic ends, also illustrated in figure 4-3.

CAUTION

Tubes containing denser items should be reinforced with wooden plugs to prevent those items from damaging the tubes.

e. Consolidation. When the tubes are packed and ready for shipment, consideration should be to consolidate in fiberboard boxes, canvas bags, or bungles with pressure-sensitive tape or strapping all tubes which may have the same project code and/or the same destination. These techniques will reduce handling and shipping costs.

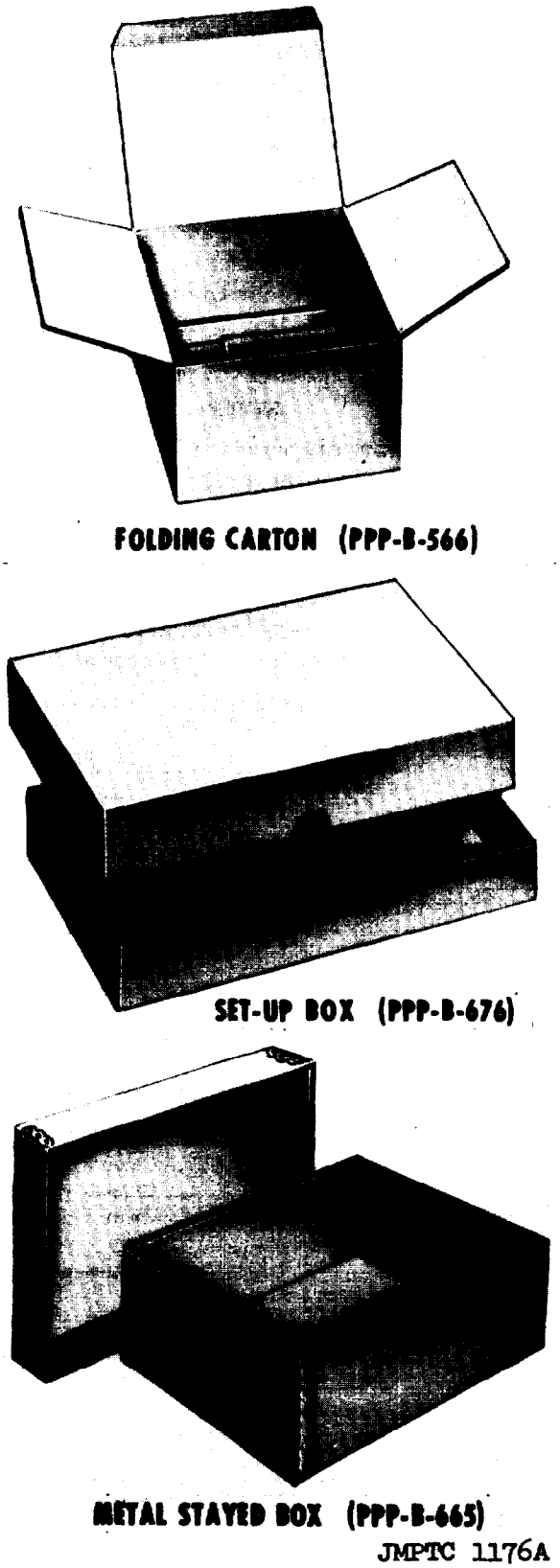

Figure 4-4. Paperboard boxes.

4-4. Paperboard Boxes (Folding, Setup, and Metal-Stayed)

Paperboard boxes are procured from qualified manufacturers in a flat, collapsed, or setup form ready for mechanical or hand assembling, shown in (fig 4-4).

a. Use. Paperboard boxes may be used as interior containers for air shipment of articles ranging from 5 to 40 pounds in weight, and from 500 to 2,000 cubic inches in volume. In order to prevent possible damage to the contents, articles packed in these containers should not be susceptible to damage by ordinary distortion due to external forces. When several of these boxes are packed and are to be shipped to the same destination, material bearing the same project code should be consolidated in a lightweight exterior container, such as a fiberboard box.

b. Selection. Paperboard boxes should be selected on the basis of the type of load placed in them. These boxes are designed for the following types of loads:

(1) *Supporting load (type 1).* This type of load consists of rigid or rectangular products which completely fill and fully contact and support all interior surfaces of the container. Examples of such products are soap, books, and other printed matter.

(2) *Semisupporting load (type 2).* This type of load consists of rigid or semi-rigid products which contact and support at least some portions or all the interior surfaces of the container. Examples of such products are cans, jars, bottles, automotive and airplane parts, and small arms ammunition.

(3) *Nonsupporting load (type 3).* This type of load consists of flexible, powdered, flaked crystalline, or odd-shaped products which either constitute a concentrated load or do not contact and support all the interior surfaces of the container. Examples are flour, sugar, soap powders, odd-shaped parts, bolts, screws, and nuts. After deciding the type of load the item represents, select the most economical container providing the degree of protection required.

4-5. Metal Containers

Many military activities utilize metal containers for storage and shipment of parts and accessories which require a high degree of protection.

a. Metal containers will vary in size depending upon the item packaged. These items will range from small ones such as starters, generators, alternators, small instruments, and other fragile and often expensive items, up to large components such as aircraft engines. Precious metal, classified

materials, and human remains are also shipped in these containers.

b. Use. There are many metal containers designed for specific items and those falling in this category will usually have specific packaging instructions for each item. Steel drums, pails, reusable and nonreusable containers are usually acceptable for air shipment.

4-6. Other Lightweight Shipping Containers

There are numerous other lightweight containers which are used for packaging and shipment by air. Additional information on these containers can be found in DLAM 4145.2, Vol. I/ TM 38-230-1/AFP 71-15, Vol. I/NAVSUP PUB 502, Rev, Vol. I/ MCO P4030.31. Refer to table 3-1, which is a cross-reference to the table of contents of the manuals referenced above and is a guide in locating information on specific containers. However, due to the numerous Federal, military, and DOT specifications on containers, not all the containers are covered in the manuals. For detailed requirements of those containers not covered, refer to the applicable packing requirements or to the applicable specification for the item or product being packed.

CAUTION

For packaging and shipment of hazardous materials in metal containers by air, refer to AFR 71-4/ TM 38-250/NAVSUP PUB 505 Rev/MCO P4030.19/ DLAM 4145.3. Also, ensure that the container has been tested and marked to the United Nations (UN) Performance Oriented Packaging requirements.

a. Selection. Before selecting a metal container for a given item, consider the use of a lightweight container, provided the container selected will afford the degree of protection required.

NOTE

When items are received in sealed metal containers to form method IA or method II packs, they should not be removed from these containers for repacking.

b. Commonly Used Metal Containers. Some of the most common metal containers used for packing materials for airlift are discussed in DLAM 4145.2.

Table 4-1. Cross-Reference Guide to Other Shipping Containers.

Container	*Specification*	*Vol. I DLAM 4145.2*	*Vol. II DLAM 4145.2*
Bags, cotton, mailing	PPP-B-20		Chap. 4, para 4-5
Sacks, shipping, paper, (cushioned or reinforced)	PPP-S-30		Chap. 4, para 4-6
Bags, textile, shipping, burlap, cotton	PPP-B-35		Chap. 4, para 4-7
Sacks, shipping, paper	UU-S-48		Chap. 4, para 4-8
Boxes, folding, paperboard	PPP-B-566	Para 5-4	
Boxes, setup	PPP-B-676	Para 5-5	
Boxes, paperboard, metal, edged and components	PPP-B-665	Para 5-6	
Drums, fiber	PPP-D-723		Chap. 5, para 5-8
Boxes, wood, wirebound	PPP-B-585		Chap. 3, para 3-9
Barrels, wood, slack	PPP-B-1806		Chap. 3, para 3-10
Cleated panel boxes (general)			Chap. 3, para 3-3
Boxes, wood, cleated plywood	PPP-B-601		Chap. 3, para 3-4
Boxes, fiberboard, wood-cleated	PPP-B-591		Chap. 3, para 3-5
Boxes, wood, cleated, veneer, paper overlaid	PPP-B-576		Chap. 3, para 3-6
Boxes, shipping, fiberboard	PPP-B-636		Chap. 2, para 2-1
Boxes, fiberboard, corrugated, triple-wall	PPP-B-640		Chap. 2, para 2-2
Bags, sleeves & tubing, interior packaging	MIL-B-117	Para 3-4	
Boxes, wood cleated, skidded load-bearing base	MIL-B-26195		Chap. 3, para 3-7

CHAPTER 5

CONSOLIDATION, UNITIZATION, AND PALLETIZATION OF AIRFREIGHT

5-1. General Concepts

The concept of consolidation is based on the fact that one large container or unit is less costly and easier to handle than several smaller ones. In its simplest form, consolidation is really the same as unit-load handling. The general principles of consolidation, unitization, palletization, and containerization are explained as follows:

a. Consolidation or Unitization. Consolidation consists of combining numerous small units or packages going to the same destination and same project code into one large unit. The term unitization also describes an operation involving the consolidation of cargo for the purpose of simplifying and expediting handling operations in subsequent movements. There are two basic forms of consolidation or unitization which are palletization and containerization.

b. Palletization. Palletization consists of placing a quantity of items, packaged or unpackaged, onto a low, portable platform made of wood, metal, fiberboard, or a combination of these materials, and securely strapping or fastening the items to the platform to facilitate handling, stowage, and transportation as a unit.

c. Containerization. Containerization consists of placing small packages in a large container, adding protection, reducing handling, and increasing the reliability of delivery of materials, in a usable condition.

5-2. Consolidation, Unitization, and Palletization (General)

Each military shipping activity should have a shipment planning function to control and monitor the scheduling and documentation of material throughout the supply and transportation cycle. This should include the requirements for consolidation, unitization, and palletization of materials entering the DOD transportation system.

a. Objectives of Consolidation, Unitization, and Palletization. Many elements are associated with consolidation, unitization, and palletization of cargo to meet the operational needs of all military services. Consolidation, unitization, or palletization of military supplies will—

(1) Provide for the handling and movement of supplies and equipment at the lowest overall cost. This can be accomplished by consolidating, unitizing, or palletizing individual line items into shipment units.

(2) Simplify documentation. The basic shipping entity for documentation, movement clearance, and marking is the shipping unit. This unit is established in the shipment planning operation and assigned a Transportation Control Number (TCN); it is controlled as a separate entity from origin to the ultimate consignee. By consolidation, unitization, or palletization of shipment units, there is less paperwork to be handled and each individual pack of a unitized load will not require shipment markings.

NOTE

When it is necessary to divide a shipment unit into smaller increments in the transportation cycle, each increment will be identified in the TCN and controlled individually.

(3) Permit shipment and handling of military supplies and equipment as a single unit from shipper to consignee and as far forward in the supply system as practical.

(4) Facilitate handling of supplies at transfer points.

(5) Ensure economic and prompt delivery of material. Consolidation or unitization of shipments should be preplanned, and compatible materials destined for a single consignee or to the most distant breakbulk point packed in one container. This will reduce the number of containers, documentation, and the cost of operation.

(6) Reduce loss, damage, and pilferage of supplies and equipment. Many items have been lost, damaged, or pilfered during handling, shipment, and storage operations. This can be reduced to a minimum if materials and equipment are consolidated or unitized as early as possible in the packing cycle.

b. Consolidation and Unitization Guidelines.

(1) Packing and shipping personnel should make maximum use of consolidation and unitization of materials whenever the size, weight, shape, compatibility, and quantity of packages or packs permit.

(2) Whenever possible, practicable, and economical, the requirements for consolidation and

unitization should be made part of purchase requirements of supplies and equipment. When a consignor and a consignee cannot agree on whether a shipment should be unitized or consolidated, the desires of the consignee should be honored.

c. Planning for Consolidation and Unitization. The shipment planning function of each shipping activity will include planning and scheduling for consolidation and unitization of cargo.

(1) *Release and control.* Shipment planning should designate specific line items for consolidation or unitization into predetermined shipment units to be moved by a particular mode of transportation. Consolidation or unitization should be planned and scheduled by the shipping activity prior to release of DD Form 1348-1A, (DOD) Single Line Item Release-Receipt Document or other approved document into the shipping activity processing cycle.

(2) *Consolidation integrity.* Each functional element of the shipping activity processing system should maintain the integrity of consolidation or unitization as planned and scheduled by the shipment function.

(3) *Direct Support System (DSS) Shipments.* To meet the objectives of DSS and to facilitate rapid disposition of supplies at destination, packing requirements will provide for separate multipacking of materiel for each customer of the supply activity. DSS materiel destined for oversea shipment will be consolidated in SEAVAN's or on 463L pallets whenever possible. The use of multibags, shrink film, and stretch film consolidation will be discussed in the following paragraphs:

(a) Multibags. Expendable multibags fabricated of L-P-378 material, size 30″×40″, provide an economical method of consolidating small packages for low volume DSS shipments. Multibags used for DSS shipments will be fabricated in accordance with PPP-B-26 and closed by tying, taping, or heat sealing. The weight of bag and contents will not exceed 70 pounds.

(b) Shrink film application of multipacks. This method of consolidation will be used in lieu of the more expensive double- and triple-wall fiberboard containers. The loaded pallet, not to exceed 1,000 pounds, will be encapsulated in an inverted shrink bag which has been placed in a jig fabricated from plywood or metal in order to hold the bag intact while packing and shrinking. Eight mil polyethylene shrink film will be utilized for multipacks whenever practicable. Expendable pallets will be used to a maximum extent possible in lieu of softwood or hardwood pallets. When the bag is ready for shrinking, the film will be neatly folded at the top of the load to assure an adequate seal. Address markings will be inserted in the bag before it is shrunk, or attached to the outside of the polyethylene bag with PPP-T-60 or PPP-T-70 tape. The front of the pallet container or the jig will be removed after shrinking. The multipack will then be removed and shipped.

(c) Stretch film application of multipacks. This method of consolidation is being selected for the same reason as was for the shrink film method and that is to provide a tight polyethylene binding of items on pallets. Heat is no longer needed to accomplish this in stretch film consolidation. Instead of heating the polyethylene, it is placed in or onto equipment capable of stretching it tightly around the load. Today, there are several brands of equipment designed for stretch wrapping a variety of items or packages on pallets. The benefits of this method are the fact that heat application is not necessary and a variety of items, including heat sensitive ones, can be safely consolidated.

5-3. Shipment Units

Subject to the exceptions below, multiple shipment units with the same transportation priority to a single breakbulk point or ultimate consignee may be consolidated or unitized for movements, provided the integrity of each shipment unit is maintained in the appropriate documentation by a shipment unit line entry as prescribed in DOD Regulation 4500.32-R (MILSTAMP).

a. Exceptions to Consolidation, Unitization, or Palletization.

(1) *Freight ratings.* Shipment units subject to commercial domestic movement, or line items subject to different freight ratings will not be consolidated or unitized into single containers when the overall delivered cost at destinations will exceed the cost applicable if each of the differently rated items are shipped in separate containers.

(2) *Physical configuration.* Consolidation will not be accomplished when the physical configuration of an item renders it incompatible for packing in the same container with other items to be shipped.

(3) *Hazardous material.* Items designated by regulatory authority as dangerous, hazardous, or explosive will not be consolidated or unitized with other items unless prior approval has been granted. Positive control of these items will be maintained by prohibiting the consolidation or unitization of two or more requisitions. Effective 1 January 1991, most international shipments of hazardous materials must conform to certain United Nations Performance Oriented Packaging (POP) tests.

Cylinders and other receptacles for gases, packages for radioactive material, and packages whose net mass exceeds 400 kg (886 pounds) or with a capacity exceeding 450 liters (118.9 gallons) are exempt from the POP tests. Some paint and paint related products (for surface movement) and some munitions groups are also exempt from testing. When preparing this material for shipment (air or surface), it must be packaged, packed, consolidated, or unitized for shipment as prescribed by the following directives, as applicable:

(a) AFR 71-4/TM 38-250/NAVSUP PUB 505 Rev/MCO P4030.19/DLAM 4145.3, Preparation of Hazardous Materials for Military Air Shipment.

(b) Title 49, Code of Federal Regulations (Part 100-179).

(c) ICAO, International Civil Aviation Organization's Technical Instructions for the Safe Transport of Dangerous Goods By Air.

(d) IATA, International Air Transport Association Dangerous Goods Regulation.

(e) IMO, International Maritime Organization's Dangerous Goods Code (IMDG).

(f) Information on specific items (stock numbered) can be found in the Hazardous Materials Information System (HMIS).

(4) *Excessive dimensional material.* Materials such as missiles (air or surface), engines, and large (excessive dimensions) spares or assemblies for any item of equipment subject to special handling will not be consolidated or unitized in the same shipment unit with other line items.

(5) *Radioactive or magnetic material.* Radioactive or magnetic material will not be consolidated or unitized together or with other material.

(6) *Project material.* Project material identified by a project code will not be consolidated or unitized into shipment units with material having a different project code or with nonproject material.

(7) *Cost-economically unfeasible.* Line items or shipment units will not be consolidated when found to be economically unfeasible due to costs for packing, repacking, handling, loading, stowage, or for similar reasons.

(8) *NMCS (Not Mission Capable Supply).* This code is assigned to identify a shipment for deadline equipment.

(9) *EXPEDITED HANDLING shipments.* Issue Priority Group/Transportation Priority 1 material on which code "999" is indicated in the required delivery date (RDD) field of the requisition will not be consolidated with other material in a single shipment unit.

b. Selection and Use of Consolidation and Unitization Containers.

(1) *Consolidation containers.*

(a) Consolidation containers should be used for shipment of supplies and material when required or when it is not feasible to use a palletized unit load. All items, packages, and packs in a consolidation container should be for a single CONUS or oversea destination.

(b) Select a consolidation container to protect shipments against the type of hazards to be encountered and the mode of transportation to be used during shipment from origin to destination.

(c) Containers selected should be of a minimum tare weight, cube, and cost which will provide protection consistent with the hazards anticipated.

(d) The container selected should not exceed in size the largest container that can be accommodated by the smallest aircraft expected to be used.

(2) *Palletized unit loads.* When all items are destined for a single CONUS or oversea destination, palletized unit loads, as opposed to consolidation containers, should be used to the greatest extent practical for shipment of supplies and equipment.

NOTE

Proper documentation for containers under each Transportation Control Number (TCN) in the palletized load must be properly documented to permit shipment to an APOE and for documentation of the manifest for aircraft cargo.

(a) When available, standard 463L materials-handling support system pallets should be used. They may be either the master pallet (108 by 88 inches) or the half pallet (54 by 88 inches).

(b) When 463L pallets are not available, make maximum use of lightweight box pallets conforming to specification MIL-P-26342 and PPP-B-640.

(c) All unit loads of cargo, except ammunition, that are palletized on other than 463L pallets must not exceed—104 by 84 inches in width and length, and 10,000 pounds gross weight when planned for air movement through systems using the 463L master pallets. Unit loads must not exceed 50 by 84 inches in width and length, and 5,000 pounds gross weight when planned for air movement through systems using the 463L master pallets. The built-up heights of pallets will conform with the dimensional data of the aircraft involved.

c. Reduction of Weight and Cube. When the requirements of chapter 2 have not been complied with, and evaluation of packs for reduction of weight and cube will be made prior to palletization, mode of transportation, and handling with the following exceptions:

(1) Delicate and fragile items requiring special blocking, mounting, or engineered cushioning should not be stripped.

(2) Small quantities of materials issued in unit packs or multiple quantities, such as nuts, bolts, and other miscellaneous items which must be packed together to maintain identity, should not be changed.

(3) Items required to be processed or repaired when the seal on the package is broken or removed should not be changed; delicate instruments are an example.

(4) Items specifically packed and plainly marked "PACKED FOR AIR SHIPMENT" should not be stripped.

(5) Items packaged under clean room conditions and so marked.

(6) Ammunition packs and unit loads may not be stripped.

d. Change in Mode of Transportation. When a change in the mode of transportation is known or anticipated, such as air-to-surface or surface-to-air, packaging personnel must know of these changes.

(1) *Surface-to-air shipments.* When the surface mode of transportation requires a container which should be removed for airlift, the packs must be marked clearly: REMOVE OUTER CONTAINER PRIOR TO AIRLIFT. Inner containers and packages must be properly marked and pertinent documentation attached by the shipper.

(2) *Air-to-surface shipments.* When an intransit station receives aircargo being diverted to surface transportation, experiences packaging personnel should inspect the cargo to determine whether it is packed satisfactorily to withstand surface movement. When materials are not properly packed, they must be repacked according to the applicable directive(s).

5-4. Use of Consolidation and Unitization Containers (General)

The purpose of consolidation or unitization containers is to combine numerous small units, going to the same destination, into one large unit. The advantage of consolidation or unitization are numerous.

a. Advantages of Consolidation or Unitization.

(1) In the interest of economy, it is cheaper to handle and ship one large unit than many small units.

(2) Consolidation or unitization containers are more uniform in size which provides for ease of storing, stacking, and handling in conjunction with mechanized operations.

(3) Reduces pilferage and stray shipments.

(4) Reduces marking operations, as shown in figure 5-1.

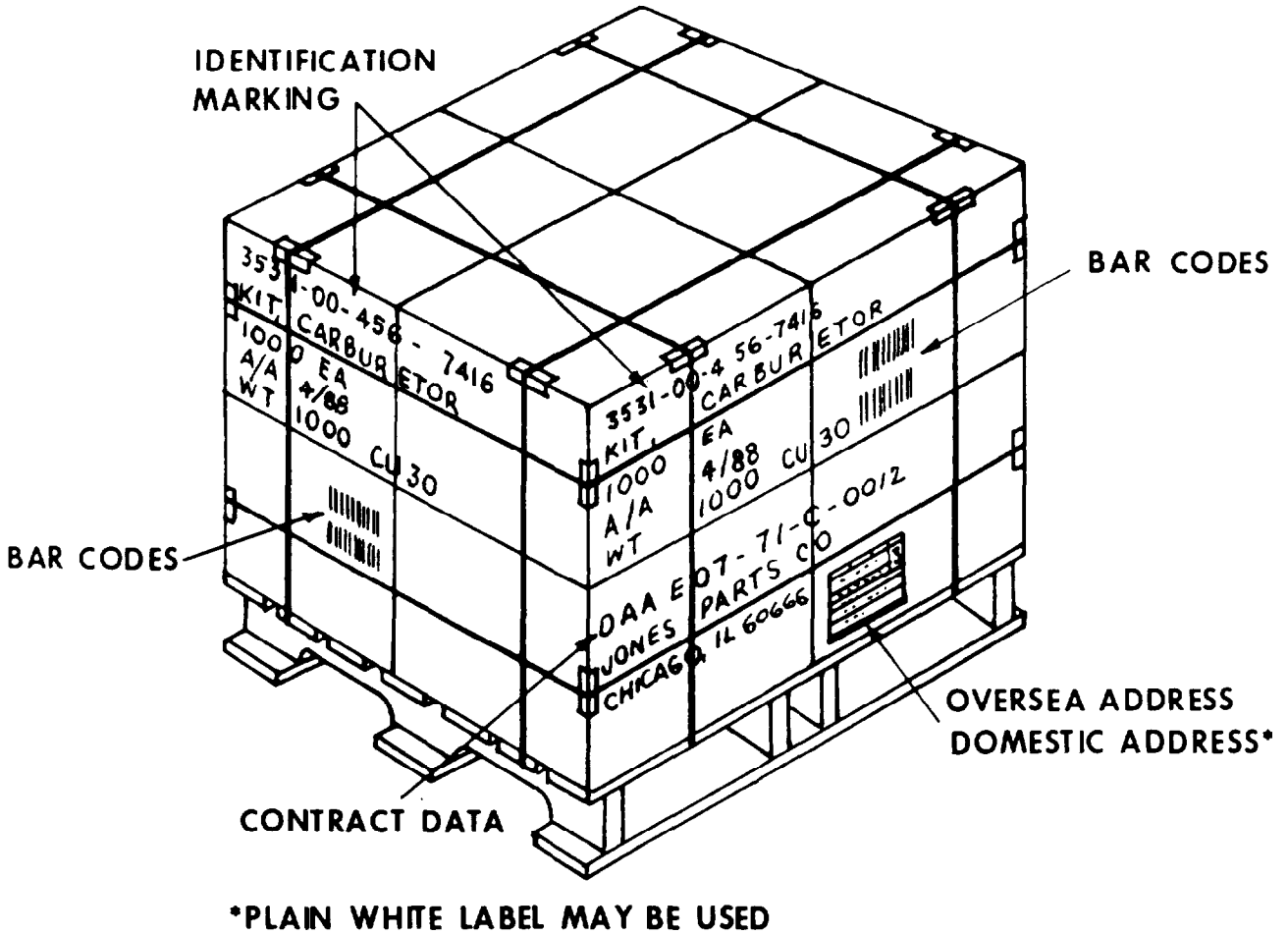

Figure 5-1. Unitized load with required markings.

(5) Provides for a minimum of aircraft groundtime.

(6) Lends to intransit storage space and transshipment of materials.

(7) Reduce the number of man-hours required for in-processing and out-processing operations.

(8) Provides for a more reliable weight figure. It is more feasible to weigh one large container or unit than to weigh many small packages or packs, or to estimate the weight.

NOTE

The true weight (gross weight) is very important to the loadmaster when loading an aircraft.

(9) When items are properly packed, no damage will result to the items.

(10) Adds considerably more support to the packs.

(11) There is less chance of small items getting lost or missing their destination if they are consolidated or unitized with other items going to the same location.

b. Disadvantages of Consolidation or Unitization. Contrary to the main objective, consolidation or unitization of freight for air shipment increases weight and cube. The following factors must be evaluated before consolidating or unitizing loads.

(1) Skids and containers will add weight and cube. Therefore, heavy containers and skids should be eliminated whenever possible.

(2) Usually there will be some loose space when packing consolidation containers. This can be reduced to a minimum by selecting and packing the containers properly.

(3) Placement of small packages into a large container or on a pallet requires a high degree of stowing skill in order that cube may be used efficiently and that cargo does not shift within the container or on the pallet during handling and transporting.

(4) Segregation of packages by the receiving activity is required, except when all items are identical.

c. Kinds of Consolidation and Unitization Containers. Some of the most commonly used consolidation and unitization containers are made from fiberboard and wood. Included in this chapter are the most economical consolidation containers used by the services when preparing materials for airlift.

5-5. Expendable Fiberboard Pallet Boxes

Specification MIL-P-26342 covers the requirements for fabricating two types of expendable fiberboard boxes.

a. Description. These containers are usually fabricated from inexpensive fiberboard which makes them expendable. They consist of a pallet base (deck), bottom tray with drainage holes, and auxiliary tray, body, and top cap. Posts are located underneath the bottom of the deck for handling with forklift trucks, as shown in figure 5-1. This container can also be constructed so that it can be disassembled and folded into a flat bundle not more than 10 inches thick.

b. Selection and Use. Expendable fiberboard pallet boxes are designed as shipping containers for consolidating many small items or packages for domestic or oversea air shipment. Selection of these containers will be based upon the destination, characteristics, size, and weight of the materials to be consolidated.

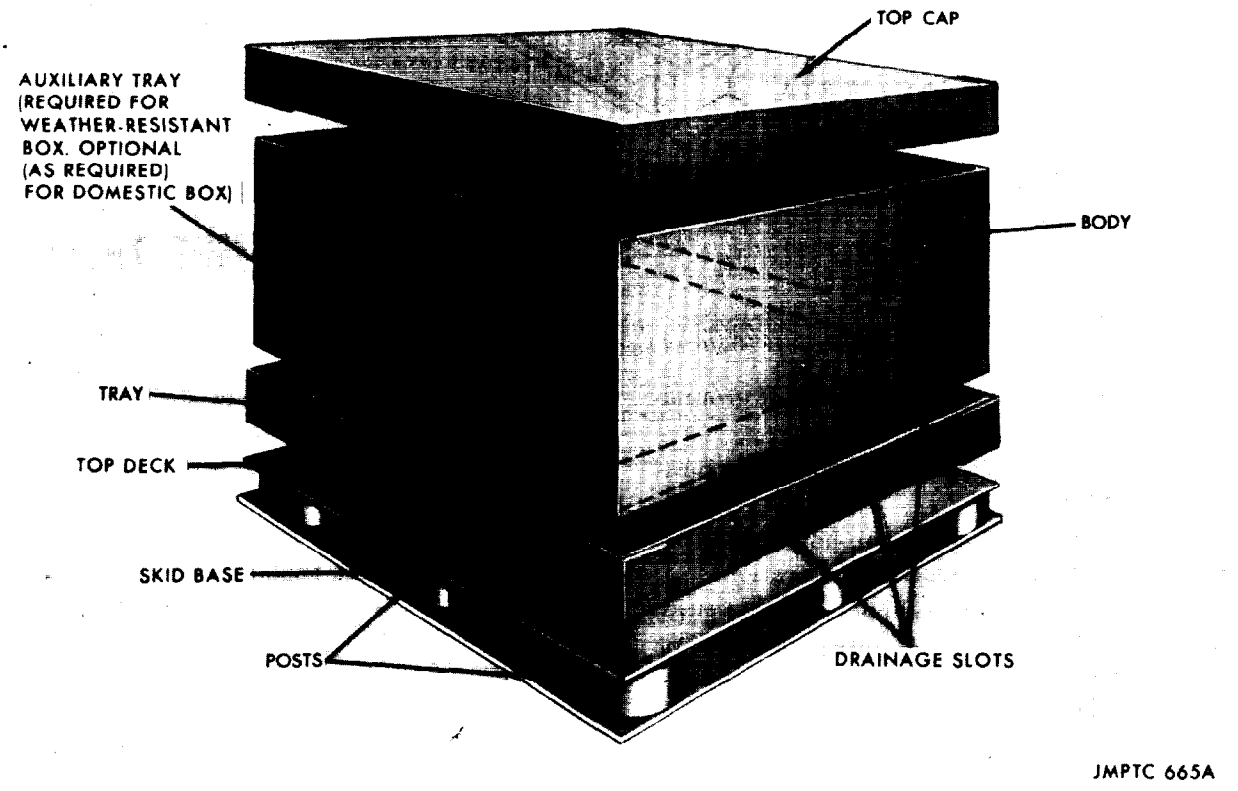

Figure 5-2. Expendable fiberboard pallet box (specification MIL-P-26342).

c. Classification. Pallet boxes covered by MIL-P-26342 are designated by Class-Domestic and Weather Resistant. The Weather Resistant class requires the use of the auxiliary tray, as shown in figure 5-2.

d. Weight and Size Limitations. These pallet boxes are available in six sizes, three (A1, A2, A3) with outside dimensions of 35 by 35 inches and three (B1, B2, B3) measuring 48 by 40 inches. Body depth varies from 12 to 36 inches. Maximum capacity is 500 pounds and 800 pounds, respectively.

e. Closure and Strapping Requirements.

(1) After boxes are packed and closed, they are strapped with nailless flat steel strapping with formed edges conforming to Specification QQ-S-781. The minimum size should be ¾ × 0.015 inches with a minimum tensile strength of 80,000 psi.

(2) Two girthwise straps shall be applied to style A-1, A-2, and A-3. The straps shall be perpendicular to each other on the top and bottom and placed approximately ½ inch from one edge of the center row of posts, as shown in figure 5-3.

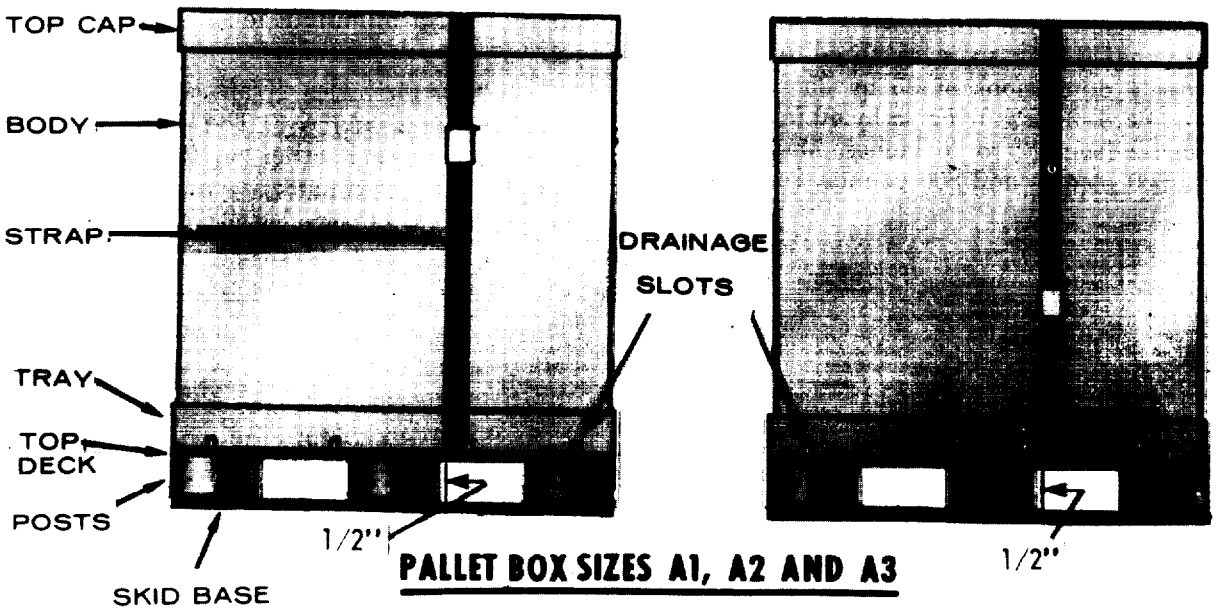

PALLET BOX SIZES A1, A2 AND A3

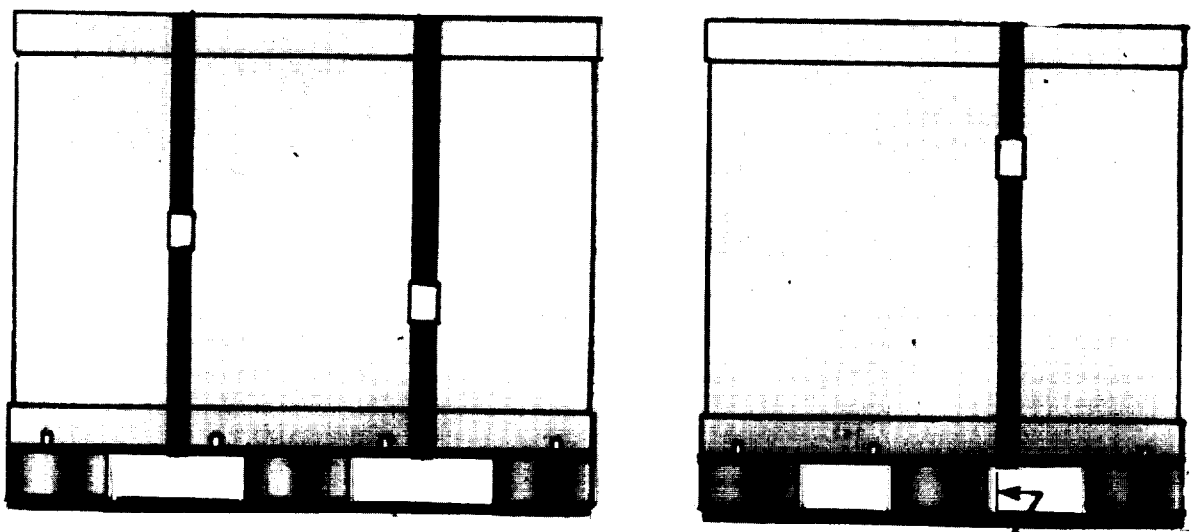

PALLET BOX SIZES B1, B2 AND B3

NOTE: USE NAILLESS FLAT STEEL STRAP CONFORMING TO QQ-S-781. SIZE 3/4"X 0.015"

JMPTC 1273A

Figure 5-3. Strapping of expendable fiberboard pallet boxes (Specification MIL-P-26342)

(3) Three girthwise straps shall be applied to sizes B-1, B-2, and B-3. Two straps shall go around the top, sides, and bottom at the center of the forklift finger areas and one strap shall go around the top, ends, and bottom. This one strap shall be placed approximately ½ inch from one edge of the center row of post as shown in figure 5-3.

(4) Straps shall be applied straight and sufficiently tensioned to imbed into the edges of the pallet box, but not to the extent of cutting, tearing, or otherwise damaging the fiberboard or crushing the content. Exposed ends of strapping shall not be of a hazardous length.

f. Shrink-Film Bonding. When specified, palletized unit loads will be bonded by the shrink-film boxes. Film will be clear or opaque as specified, and compatible for use with the method employed. Thermoplastic films of 6 mil polyethylene, 5.5 mil reinforced polyethylene, or 2.5 polyvinyl chloride are acceptable for loads up to 2,000 pounds. Loads from 2,000 to 3,000 pounds will utilize thicknesses of 8 mil polyethylene, 5.5 mil reinforced polyethylene, 4 mil polyvinyl chloride respectively. Shrink film wrapping of airdrop equipment, clothing and personnel support equipment and subsistences commodity loads shall be limited to Level C shipment. The film will be a bag encapsulation over the entire load and extend at least six inches beyond the bottom of the pallet, as shown in figure 5-4.

Figure 5-4. Shrink-film bonding.

g. Other Expendable Fiberboard Pallets and Boxes. There are many other configurations of expendable fiberboard boxes and pallets designed for specific application. Figure 5-5 illustrates some of these configurations and designs.

(1) As an alternate to the standard NN-P-71 pallet, acceptable commercial expendable lightweight pallets as covered by DA PAM 746-1 will be used to palletize large quantities of single stock numbered items for air shipment of interlocking loads. Minimum load rating of expendable pallets and maximum gross weight of unit loads will be limited to 1,500 pounds. If noninterlocking loads are shipped, a solid piece of ⅜-inch (minimum) plywood, 40- by 48-inches will be placed on the pallet before assembling the load. Palletization on 40- by 48-inch (1,000 × 1,200mm) pallets will be in accordance with DA PAM 746-1, paragraph 3-11. Strapping of individual containers is not required.

(2) Assorted stock numbers of binnable or small items will be consolidated as multipacks. Fiberboard consolidation containers conforming to MIL-B-38721 or appendix G of AMCR 746-8 may be used for level B multipacks.

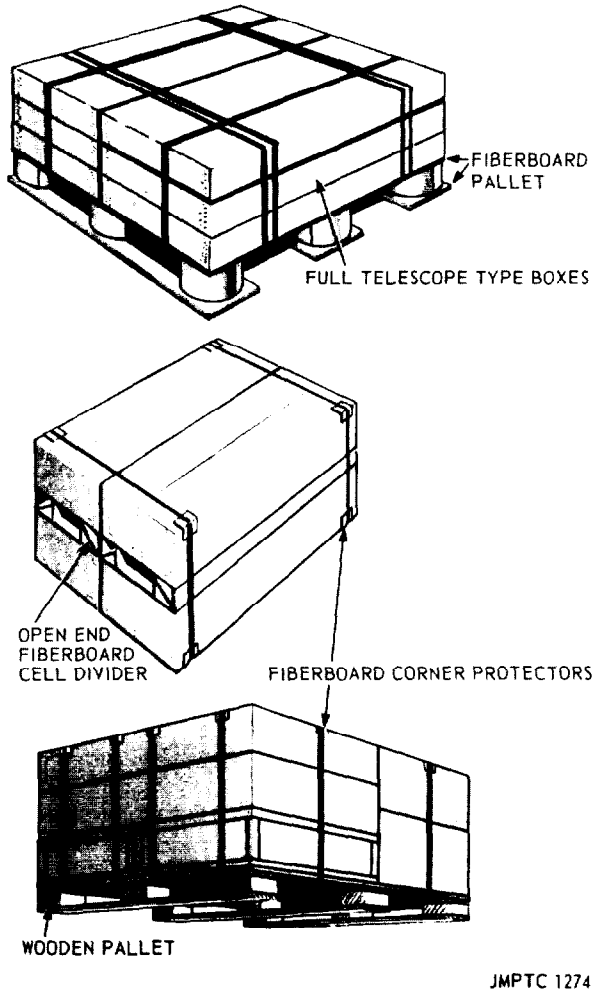

Figure 5-5. Expendable fiberboard boxes and pallets.

5-6. Fiberboard Consolidation Boxes

Specification MIL-B-38721 covers fabrication requirements for weather-resistant, high stacking strength, double-wall and triple-wall corrugated fiberboard boxes.

a. Description. These containers are similar in construction to triple-wall consolidation boxes and the expendable fiberboard pallet boxes, which are shown in figure 5-6.

b. Selection and Use. Boxes covered by Specification MIL-B-38721 are intended for domestic and oversea shipments of consolidated aircraft parts and general supplies and equipment. These containers should be used by all activities to curtail or eliminate the use of high tare weight containers such as the CONEX. These boxes were designed as a standard system of fiberboard containers to meet the requirements of the 463L program (para 1-14). The versatility and flexibility of these containers

have been acceptable and approved throughout the Air Force Logistic Command. However, other services may use them in order to reduce weight, cube, and cost in the interest of economy. They are compatible with all modes of transportation.

c. Classification. This container system consists of three types and three styles of containers. There are also five different sizes available. Type refers to the material from which the container is made (double or triple wall fiberboard or polyolefin), style to design of the container (tube body, half-slotted body of one-piece container with cover). Sizes are Sixteenth, Eighth, Quarter, Half, and Full size, as illustrated in figure 5-6.

d. Weight and Size Limitations. The complete system of containers consists of five sizes, all modular to the 463L pallets and compatible with aircraft door openings and standard surface carrier equipment.

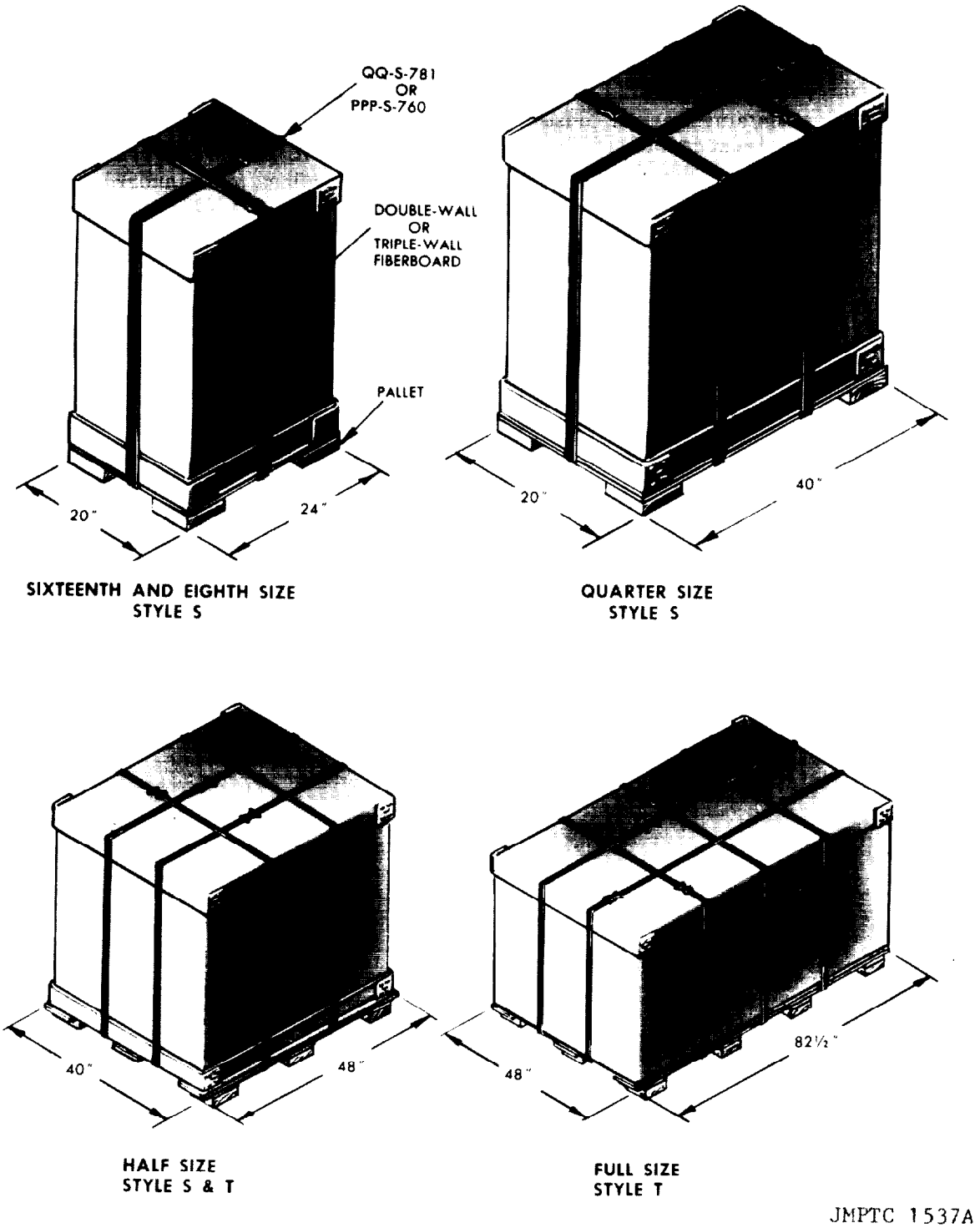

Figure 5-6. Styles and types of fiberboard consolidation boxes (specification MIL-B-38721).

5-7. Boxes, Shipping Consolidation (MIL-B-43666)

Specification MIL-B-43666 covers the requirements for modular size weather-resistant wood cleated plywood, wire-bound plywood, and fiberboard shipping boxes, provided with pallet bases, as applicable. Weight capacity varies from 1500 to 2600 pounds.

a. Classification. Shipping consolidation boxes described by Specification MIL-B-43666 are obtainable in the following types, styles, and sizes:

(1) *Types.* Type I, wood cleated plywood; type II, wire-bound plywood; and Type III, fiberboard.

(2) *Styles.* Style 1, block-type skid base; Style 2, notched runner skid base; Style 3, regular slotted container (with or without pallet base); Style 4, half slotted container (HSC) with telescoping sleeve and cap; Style 5, flanged bottom tube with cap and pad; and Style 6, half slotted container (HSC) with cap.

(3) *Sizes.* There are 22 different sizes. Refer to specification MIL-B-43666 for details.

b. Intended Use. Boxes covered by this specification are intended for domestic and oversea shipment of supplies and equipment. They are intended to improve the packing and unitizing of oversea shipments, to compensate for shortage of terminal handling facilities, equipment and personnel, and to protect material pilferage, physical loss, and damage in transit. These boxes are designed to carry type 1, 2, and 3 loads. Type I and II containers may be used as inserts for SEAVAN or MILVAN, or as exterior shipping containers for conventional transportation.

5-8. Blocking and Bracing Techniques

a. Utilizing the container. Consolidation containers, as illustrated in figure 5-7, have the characteristic of being reusable although they are considered expandable. Therefore, they may be altered to fit the load. There are several ways of using the containers as a means of immobilizing the interior loads. These techniques are more applicable to fiberboard than to wooden containers and consist of the following:

(1) The use of banding.

(2) Slitting corners and folding in the ends of the containers.

(3) Cutting off the top of the container.

(4) Using containers which are designed to be telescopic.

(5) The use of internal blocking and bracing with cells and pads.

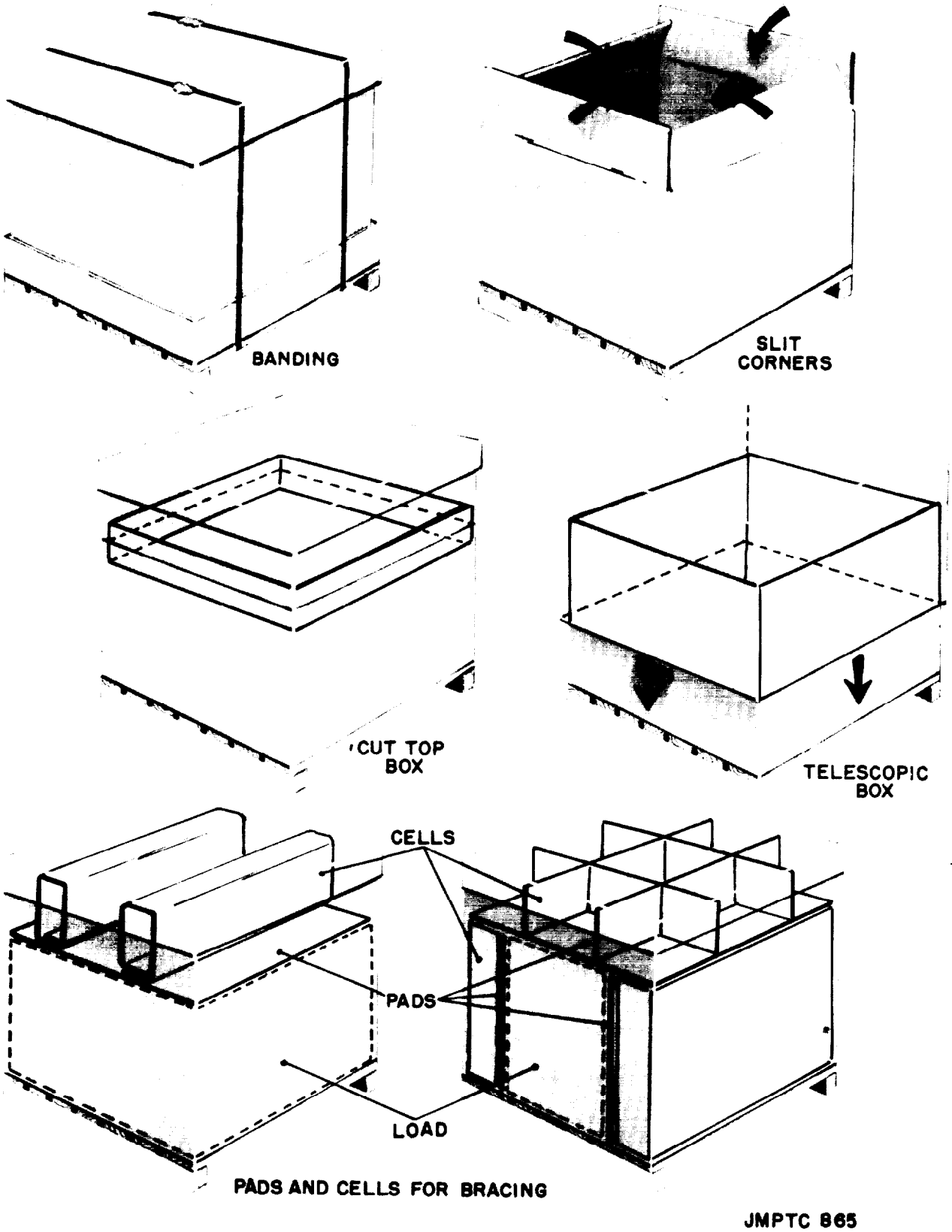

Figure 5-7. Utilization of consolidation containers.

b. Utilizing Fiberboard Pads, as shown in figure 5-8.

(1) Fiberboard is recommended for blocking and bracing purposes because it is cheap, lightweight, strong, and easy to work with.

(*a*) Fiberboard should conform to specification PPP-F-320, type CF or SF, when use justifies purchase. Used fiberboard boxes or scraps can be used where the need is small or expedient.

(*b*) The strength of the board will depend upon the type and grade of fiberboard used, the weight of the package, and the forces to which shipment will be subjected.

(*c*) The material may be easily cut with a knife or by special machines.

(*d*) For bending purposes, the fiberboard should be scored according to specification ". . . perpendicular to the directions of the flutes." This provides for the greatest resistance to shock forces. A wooden tool or a machine can be used for scoring purposes.

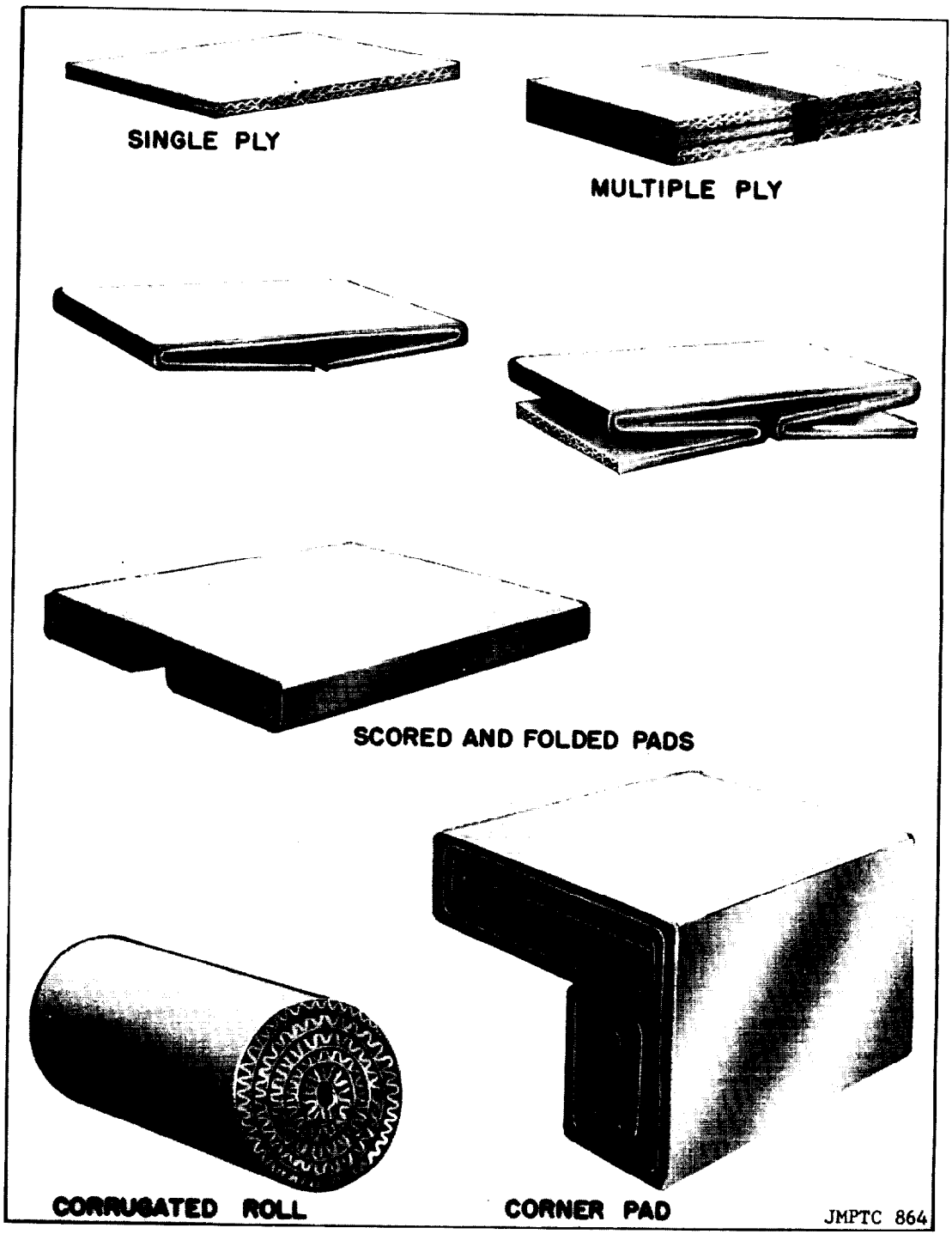

Figure 5-8. Fiberboard pads.

(2) Types of fiberboard pads may be in the form of flat pads (single- or multiple-ply), pleated pads, rolls, or corner pads, as shown in figure 5-8.

(3) Corrugated fiberboard is more resilient when it is shaped so that the corrugations resist compression by the load, as flat and pleated pads.

(4) Pleated and flat pads are good for cushioning and as blocking and bracing to distribute the load over a larger area.

(5) Pads the size (L x W) of the container will be the most used media for consolidation purposes.

c. Utilizing Fiberboard Cells. Cells should be used primarily for blocking and bracing; however, they to provide a limited degree of cushioning. They can be used most efficiently where there is a void or opening to block out. Flat pads may be formed into a variety of shapes for use as cells. Their shape may be in the form of squares, rectangles (sleeves), triangles, hexagons, pleats, X patterns, circles, or corner cells, as shown in figure 5-9.

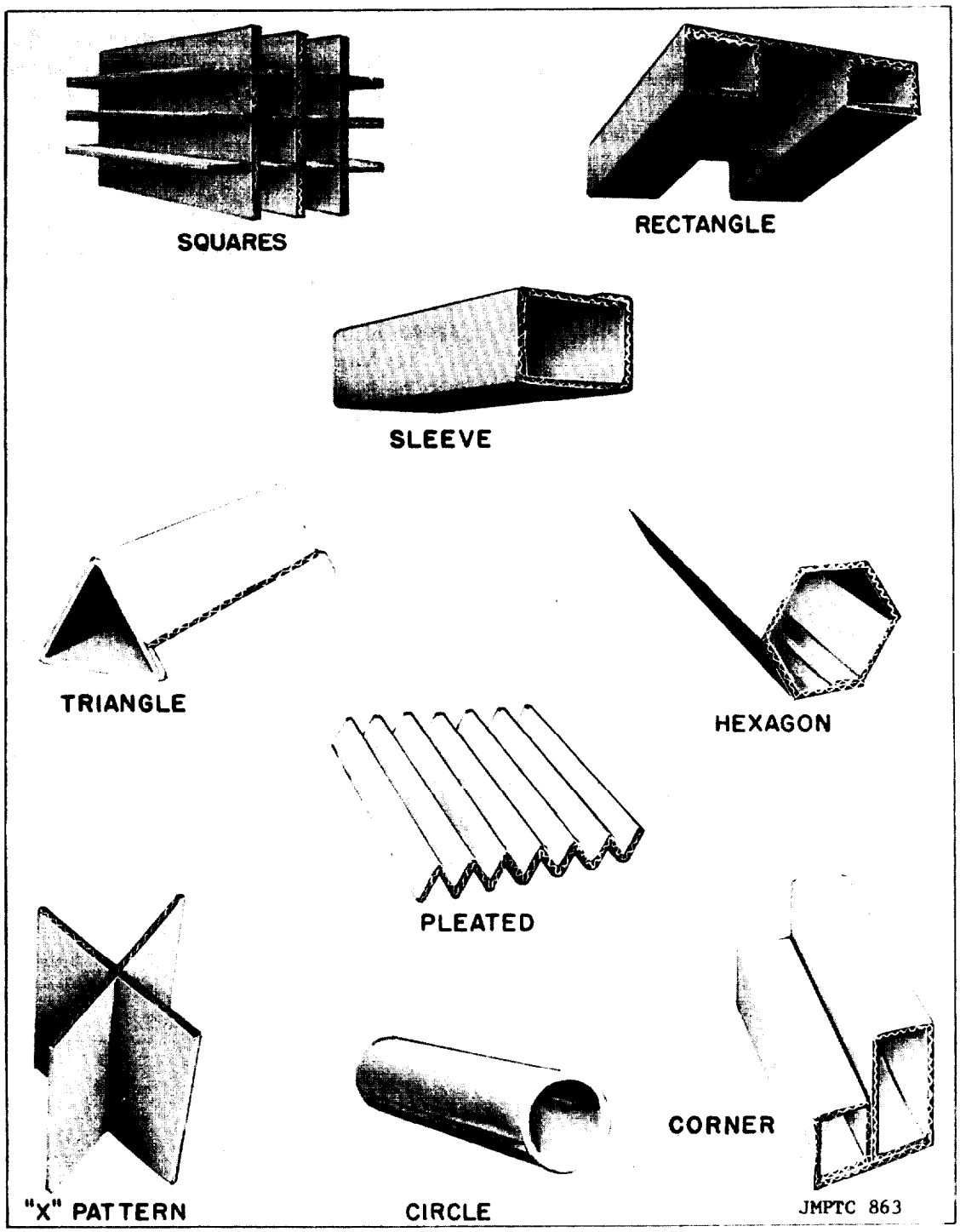

Figure 5-9. Fiberboard cells.

5-9. Packing Consolidated Containers

a. Problems Involved in Consolidation. The main problem involved in consolidation of materials becomes one of shock mitigation.

(1) The packer must be skilled in placing packages in the container so that each package "wedges in" other packages.

(2) The packer must be able to block or brace the load as he progresses, in a minimum of time and with the cheapest and lightest material, yet strong enough to do the job.

(3) Essentially, the problem becomes one of converting a type 3 load to a type 2 load for protection against shock and vibration.

b. Shock Mitigation. In order to meet the problem of shock mitigation relative to consolidation containers, there are certain basic procedures to follow:

(1) Try to maintain level layers.

(2) Fill all internal voids as the load progresses.

(3) Keep the center of gravity low placing heavy items in the center and low in the container.

(4) Block and brace the interior load adequately to prevent movement caused by shock and vibration.

c. Blocking and Bracing the Load.

(1) The ideal conditions for full utilization of consolidation containers are present at the contractor level where he can tailor a container to the size of uniform interior packages.

(2) These ideal conditions are not present at the depot or base level where a variety of package sizes must be placed in a consolidation container.

(3) Voids that occur at the top of the pack are probably the most usual, as shown in figure 5-10. In order to provide hold down media for the load, first cover the packs with pad(s) and then place cells between the pads and the container cover. The use of adhesives will hold the cells in place. Cells should be located where strapping will be placed. Where feasible, the corners may be split down to the top of the load and the excess portion of each side panel, above the top of the load, may be folded in, thus eliminating the need for cells, as shown in figure 5-9.

(4) Voids that occur at the sides of the pack can be handled with pads and cells, the same as top blocking and bracing, as shown in figure 5-11.

(5) Interior voids, as shown in figure 5-12, are the hardest to cope with and the most time-consuming. All voids that would permit shifting of the packages should be filled with cells as the layers progress. If the packages are uniform, one sleeve may fill the void for several layers of packages

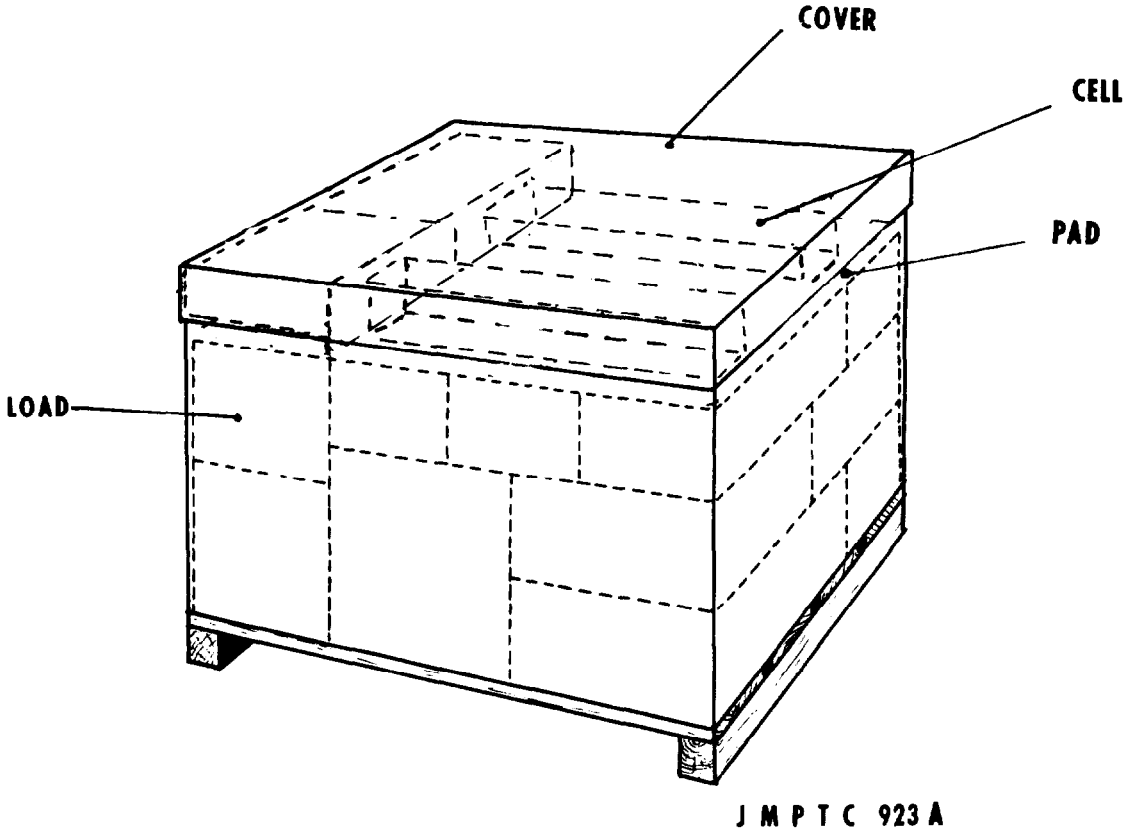

Figure 5-10. Blocking and bracing top voids.

(6) Compound voids (top and side, two sides, etc.) may take a little more skill, but pads and cells can be used to block and brace the same as previously discussed.

(7) The major problem relative to consolidated shipments is to adequately secure the interior cargo so that shock forces due to vibration and impact will not cause damage to the items. If we can assure that the items have been adequately cushioned in their containers, no further extensive protection is required within the consolidation container. However, in order not to compound the shock forces, it is necessary to block and brace within the consolidation container. Any additional cushioning achieved through blocking and bracing is added insurance against damage resulting from shock forces.

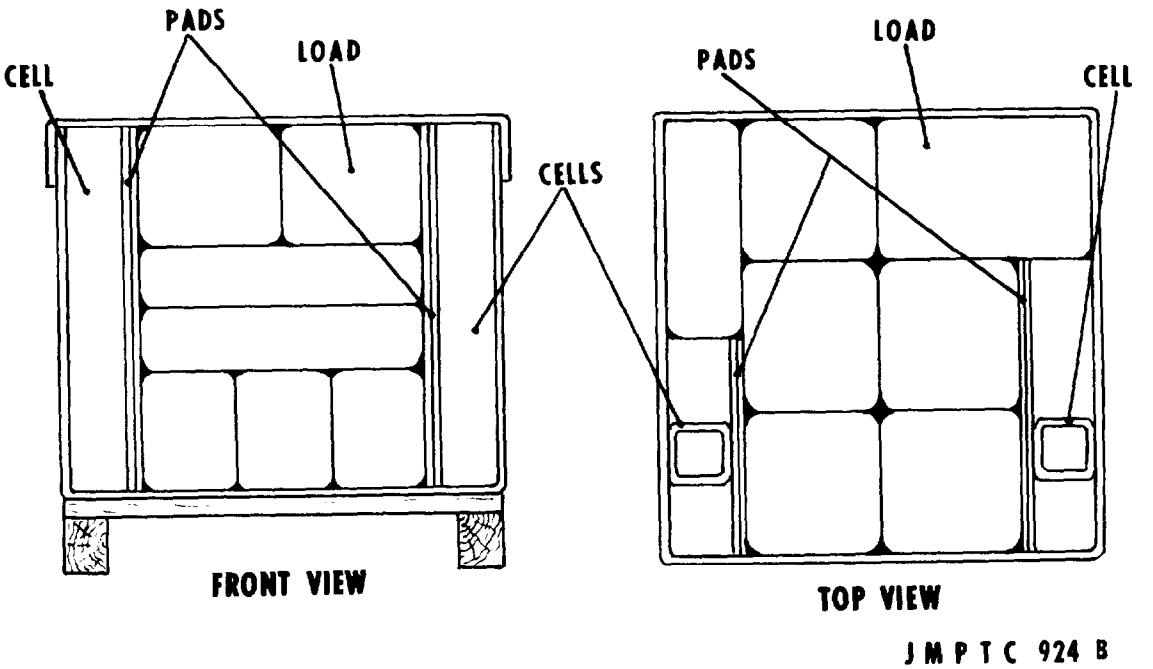

Figure 5-11. Blocking and bracing side voids.

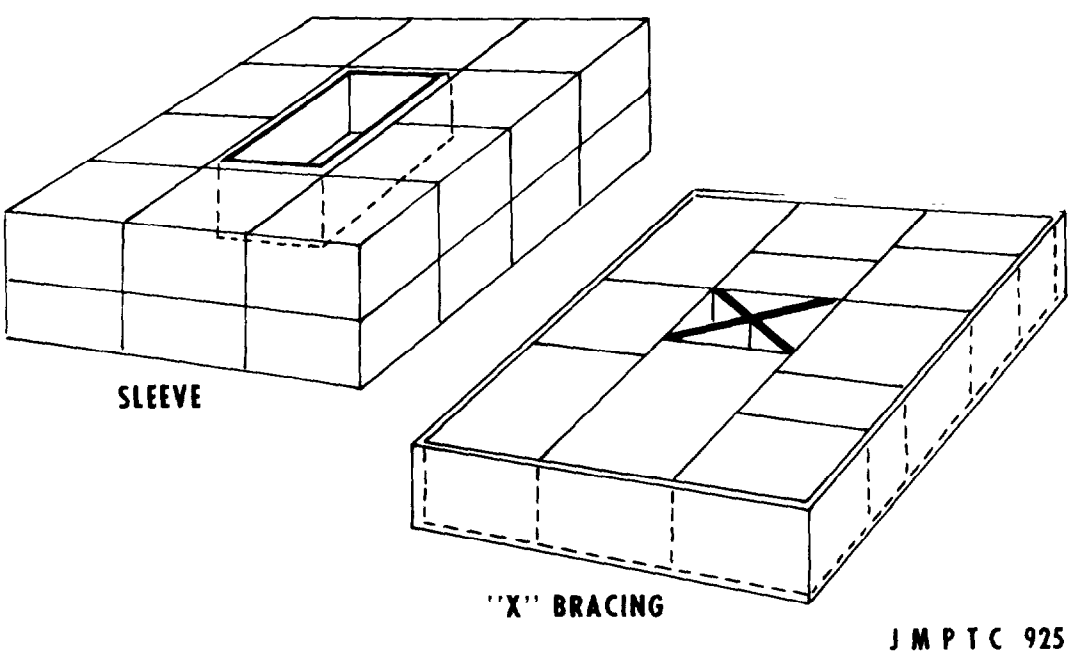

Figure 5-12. Blocking and bracing interior voids.

5-10. Utilization of Pallets (General)

a. Description. A pallet is a portable platform upon which material is placed to permit stacking and to facilitate handling and transportation of the material as a single unit load.

b. Types of Pallets. Pallets are classified as expendable or permanent. They are also classified as general purpose or special purpose.

(1) *Expendable pallets.* Expendable pallets, in figure 5-13, are designed generally for one ship-

ment and then discarded. Their construction is usually of wood, fiberboard, or a combination of the two. In order to be effective as one-trip pallets, they must be lightweight and low in cost. When the cost of using them is equaled or exceeded by the savings realized during a single trip, they are truly expendable pallets.

(2) *Permanent pallets.* Permanent pallets are termed as general purpose and special purpose pallets.

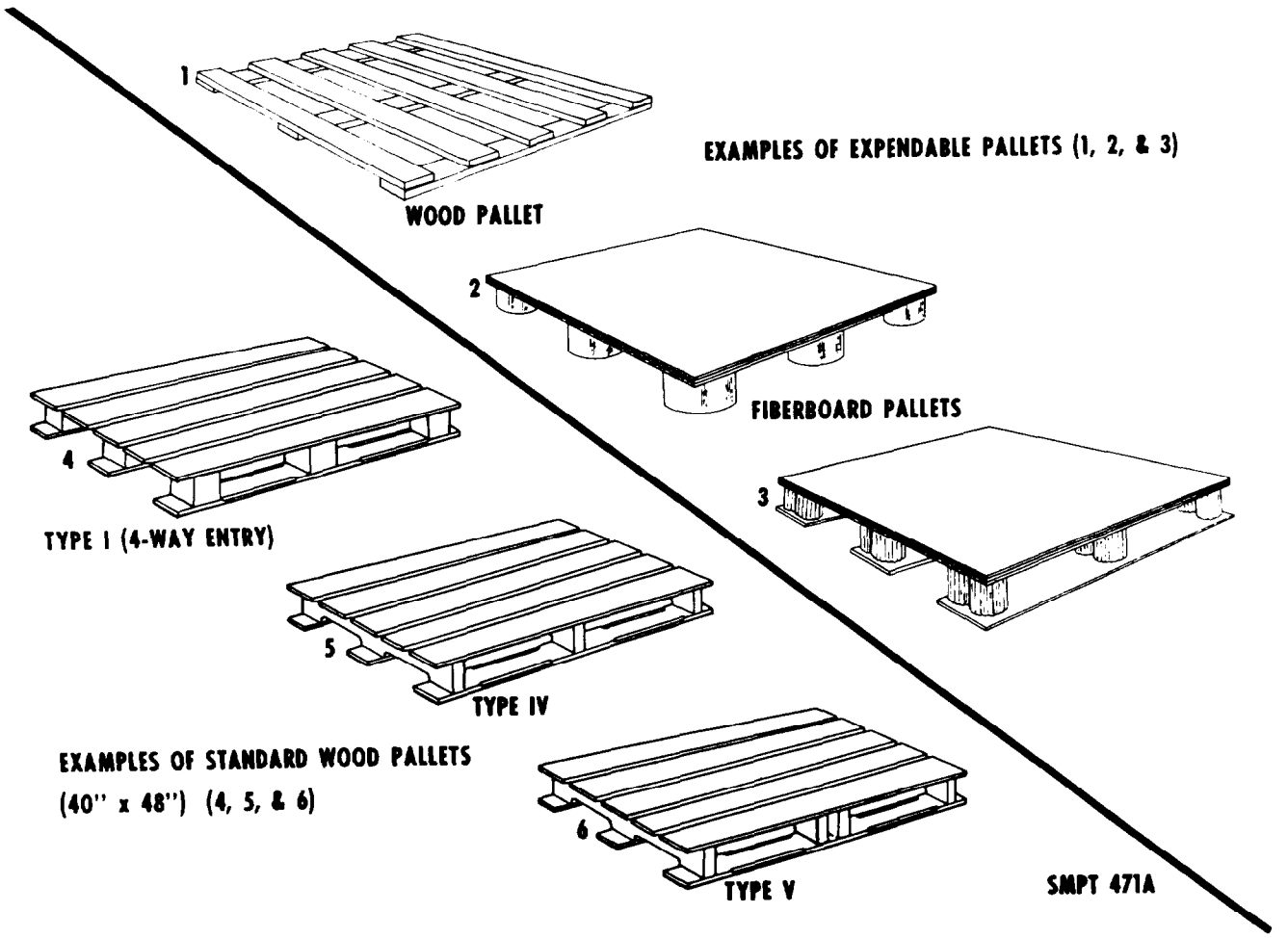

Figure 5-13. Examples of standard (permanent) and expendable pallets.

(3) *General purpose pallets.* The general purpose pallets are constructed of hardwood and are 40 inches by 48 inches in size. They fit economically into railroad cars, motor vehicles, and trailers. Two general purpose pallets are the four-way entry post pallet and the four-way (partial) four-stringer pallet. An example of the standard or permanent pallet is shown in figure 4-13. The 40″×48″ standard wood pallet, as shown in figure 4-13, is size-compatible with the 463L Air Force pallet, shown in figure 1-1. Four of these standard wood pallets would be loaded on the 108″ × 88″ 463L Air Force pallet.

(4) *Special purpose pallets.* Pallets made of metal, which are suitable for certain heavy duty usage, are special purpose pallets. They are more rugged and will stand more abuse than wood pallets. There are no fasteners to work loose and cause damage to flexible containers and their contents. Pallets made of aluminum have been developed which are light in weight. The initial cost of

metal pallets is high in comparison to pallets made of wood.

5-11. Palletized Unit Loads

MIL-STD-147 contains description, illustrations, practices, and procedures to be followed in palletizing unit loads for the Department of Defense. It is intended to be used as an applicable standard in contracts requiring the preparation and shipment of bonded palletized unit loads for Department of Defense facilities. It will also be applicable for movement of material between and/or within the military services.

a. Scope of MIL-STD-147. This standard establishes the methods, materials, and techniques to be employed in the formation of bonded palletized unit loads of military supplies which are adaptable to unit loading. The methods prescribed in the standard are to be utilized with the standard, general purpose, 40 × 48-inch pallet or with skids, runner, or pallet type bases.

b. Economy. Use of MIL-STD-147 should promote economy in the preparation of bonded palletized unit loads and should aid in effective and economical delivery of the load to the ultimate point of use.

c. Loading Patterns. For convenience to users, MIL-STD-147 contains pallet patterns applicable to the palletization of rectangular containers.

d. Ammunition. Ammunition unit loads are configuration controlled and may not necessarily look like MIL-STD-147 loads.

CHAPTER 6

SKID ASSEMBLIES

6-1. Skid Assemblies

Many large, rugged items not requiring the complete protection afforded by a crate or other container may be more easily handled and transported if mounted on skid assemblies. In general, these items must be rugged enough to withstand impacts and must be designed for outdoor use or require only simple protection from the weather. Heavy castings, noncritical parts of equipment, or vehicles are examples of items that may be skidded. There are many items that because of their weight and design require the use of skids in order to make them more easily transportable. When shipping items such as computer, electronic consoles, and related equipment, it is often necessary to design a skid with shock and vibration devices built into it. In some instances special vehicles and railcars are utilized which incorporate various kinds of shock and vibration mitigation devices.

a. Definitions of Skid Assemblies.

(1) *Wooden skid assembly.* A wooden skid assembly consists of parallel members fastened together by crossmembers or headers and reinforced when needed by floorboards and diagonals.

(2) *Aluminum skid assembly.* An aluminum skid assembly consists of parallel runner beams fastened together with header beams and reinforced with crossbeams and accessory beams when required. More concerning aluminum skid assembly will be discussed in paragraph 6-3, "Metal Assemblies."

b. Design Considerations. Before designing the skid, preliminary planning and proper preparation of the item must be undertaken. Partial disassembly of an item, for example, may permit the use of a smaller skid assembly or make the construction of a skid less complicated. This may include the removal and separate packing of certain projecting or easily damaged parts in order to prevent damage during handling and shipment. The disassembled parts may be packed in small containers and secured to the skid. If they are not secured to the skid, they should be set-marked, so that they may be easily identified at the point of assembly. Freemoving parts should be tied, taped, or otherwise secured. Critical surfaces or fragile parts that cannot be removed should be enclosed in shrouds or other covers or protected with wood or plywood housings. All openings that would permit dust or moisture to enter the working parts of the equipment should be sealed.

6-2. Wood Assemblies

a. Materials. The lumber or timbers used in constructing a wooden skid assembly must meet the following requirements:

(1) *Moisture content.* The moisture content of the lumber must not be greater than 18 percent of its oven-dry weight.

(2) *Knots.* Lumber with knots having a diameter greater than one-fourth the width of the face or located at the fastening points or other critical areas cannot be used.

(3) *Cross grain.* A slope of grain of not more than a ratio of one in ten is required.

b. Design of a Skid Assembly. The length and width of the item, its weight, type of base, and the distance between portions of the base that contact the skid (unsupported span), are all factors that must be considered when designing a wooden skid assembly. In order to use the tables which give the requirements for skids and floorboards, for example, a weight-length value (WL) must be obtained by multiplying the actual weight of the item by the unsupported span. This span will vary with the base of the item, thus the item must be classified as indicated below. As the proper application of any of these factors may depend upon the use of one or several of the other factors, it is suggested that this information be read through, and then a preliminary skid be drawn up on paper before the actual construction is started.

c. Classification of the Item. To help in the determination of floorboard requirements, the length of the unsupported span, etc., all items have been classified into two groups—

(1) *Group I.* Group I includes items supported on bases with openings between the points of contact with the skids, such as items with legs or end frames or double- or triple-column bases, as shown in figure 6-1.

(2) *Group II.* Group II includes items that are supported on bases, such as on pedestals, and rectangular or irregularly-shaped boxes, as shown in figure 6-1.

d. Determination of Wooden Skid Assembly Requirements. The length and width of skid assemblies are, in general, determined by the overall

length and width of the item. The length and width of the assembly must exceed the corresponding dimensions of the base of the item by at least ½ inch and any part of the item, including tables, ways, or projecting parts, by at least 2 inches. When necessary, additional length must be provided for a crossmember (header) of the same dimensions as the skids and the bevel at the end of the skid. Illustrated in figures 6-2, 6-3, and 6-4 are typical wooden skid assemblies along with proper application.

(1) *Number of skids.* The number of skids is determined by the requirements for securing the equipment and for protection of projecting parts, as well as by the width and thickness of available skid material, mounting provision, or because additional width is required to protect projections, as shown in figure 6-1.

(2) *Skid ends.* The ends of all skids are beveled as illustrated in figure 6-5. The bevel is on the underside of the skid at a 45° angle from the ends, and has a depth of one-half of the depth of the skid for skids up to 4 inches in thickness. For skids over 4 inches in depth, the bevel should not be more than 2 inches deep.

(3) *Bolts at skid ends.* For skids in which the largest dimension is 6 inches or less, place a ¼-inch diameter carriage or step bolt horizontally through each end of the skids slightly above center and approximately 2½ inches from the end. This is done to increase the resistance to splitting of the skids during handling. For skids over 6 inches, place two ¼-inch diameter bolts horizontally through each end, one 2 inches from the upper surface, and the other 3 inches from the lower surface, with both approximately 2½ inches from the end. On outside skids, place the boltheads on the outer surfaces, as shown in figure 6-5.

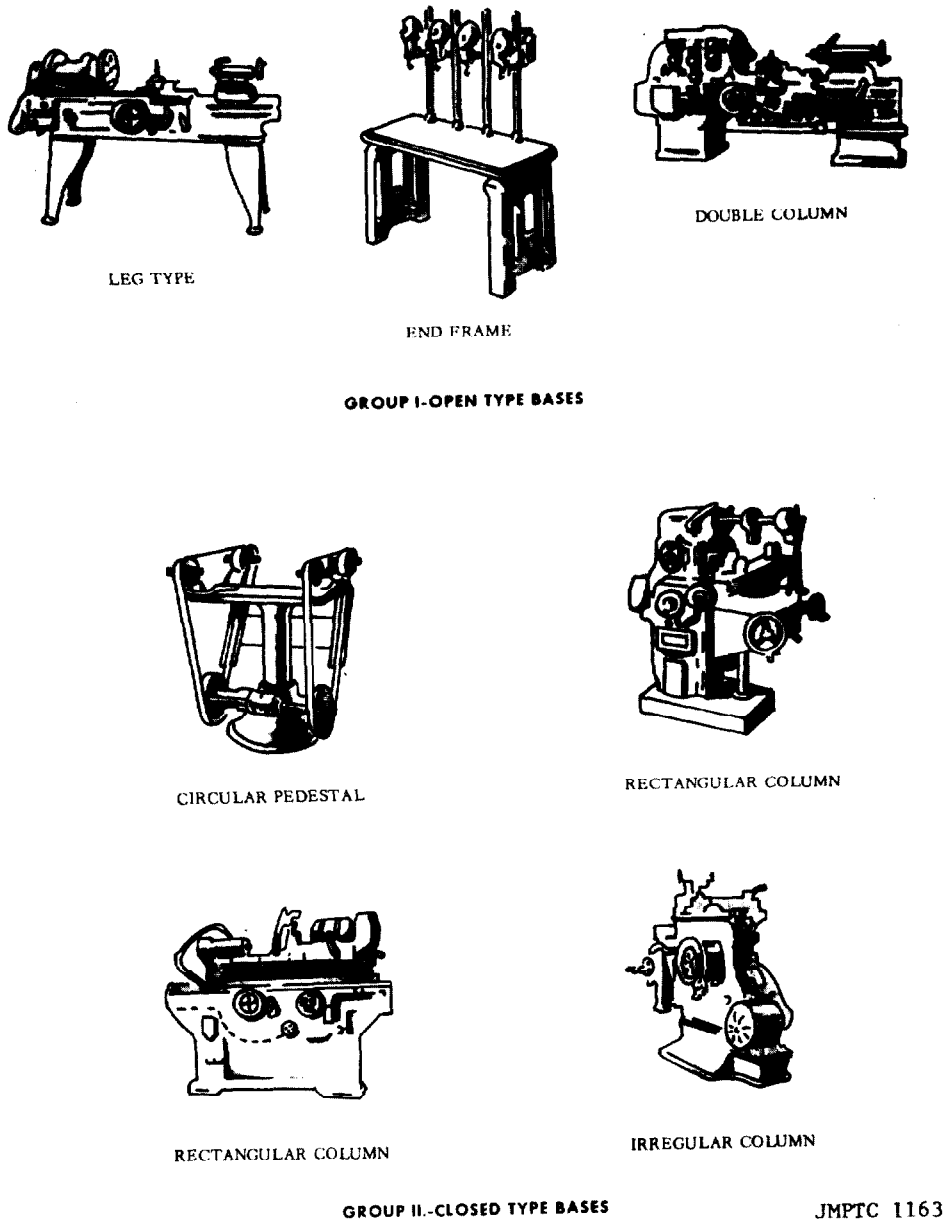

Figure 6-1. Typical mechanical equipment bases.

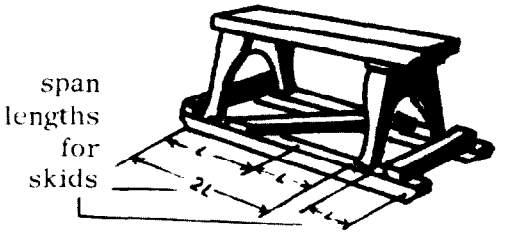

LEG TYPE BASE - EQUIPMENT WITHOUT SIDEWISE PROJECTIONS

NOTE: Floor boards not required unless two skids are employed

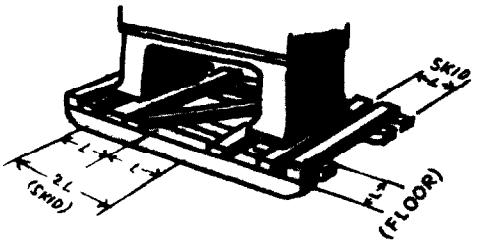

DOUBLE COLUMN TYPE - EQUIPMENT WITH SIDEWISE PROJECTIONS

JMPTC 1164

Figure 6-2. Typical wooden skid assemblies utilizing group I, open-type bases.

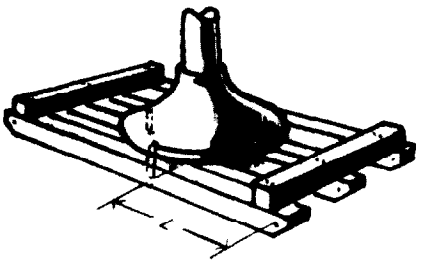

PEDESTAL TYPE BASE - EQUIPMENT WITHOUT SIDEWISE PROJECTIONS

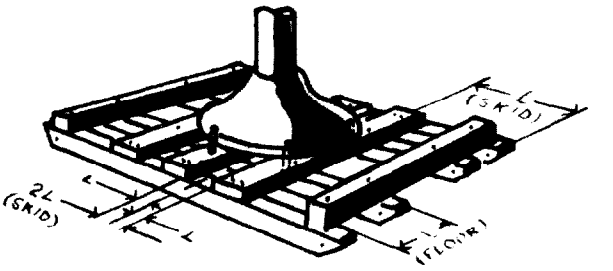

PEDESTAL TYPE BASE - EQUIPMENT WITH SIDEWISE PROJECTIONS

JMPTC 1165

Figure 6-3. Typical wooden skid assemblies for equipment with pedestal and similar group II, closed bases.

e. End Floor Members (headers). These members are of the same cross-section dimensions as the skids and should be positioned flatwise on the skids.

f. Floorboards. Floorboards of uniform thickness are used in any assembly where all of the skids do not directly support the load (fig. 6-2, 6-3, and 6-4).

g. Floorboard for Equipment Bases, Group I. When more than two skids are required, there must be at least one floorboard under each pair of legs and under each frame column (shown in figure 6-2). The flooring is arranged so that all bottom edges, cross walls, and ribs of the item which parallel the direction of the floorboards are supported. When more than one floorboard is required for support, the spacing of the board is governed by the requirements for strength, except that any bolts through the base and skids must also pass through the floorboard.

h. Floorboards for Equipment Bases, Group II. When floorboards are required under bases, at least three are used (shown in figures 6-2 and 6-3).

i. Diagonal Bracing. Skid assemblies for group I equipment require one or more diagonal braces as illustrated in figure 6-2. The angle of any diagonal with skids shall be not less than 30° nor more than 60°. Diagonals may be fastened to the upper side of the skids or the underside of the headers and floorboards. When more than one diagonal is used, each successive diagonal shall slope in the opposite direction and a strut shall be fastened across the full width of the assembly between the ends of the diagonals. The strut is not needed when the diagonal bracing is crossed by floorboards or by part of the equipment base.

j. Fabrication of Skid Assembly. The skids and headers are assembled to form a rectangular base in accordance with the following:

(1) *Bolts at skids ends.* These bolts are put in place according to the instructions given in *d*(3) above, before the skid is assembled.

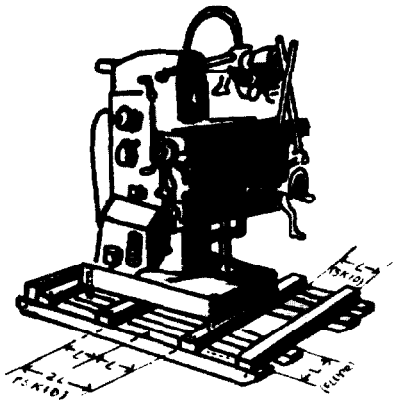

RECTANGULAR COLUMN TYPE BASE - EQUIPMENT WITH SIDEWISE PROJECTIONS

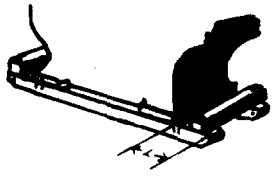

RECTANGULAR COLUMN TYPE BASE - EQUIPMENT WITHOUT SIDEWISE PROJECTIONS

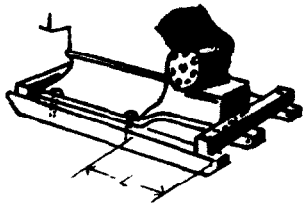

IRREGULAR COLUMN TYPE BASE - EQUIPMENT WITHOUT SIDEWISE PROJECTIONS

NOTE: Additional skid provided for irregular base

JMPTC 1166

Figure 6-4. Typical skid assemblies for equipment with rectangular or irregular group II, closed bases.

(2) *Assembly bolts.* Fasten the skid and headers together with standard carriage or step bolts with a plain washer used under each nut. All base assembly bolts are placed with the heads countersunk in the skids to a depth equal to the thickness of the head plus one-sixteenth of an inch. Headers of less than 5 inches in width require only one bolt; however, those of 5 inches or more should have at least two bolts through each skid fastening. For headers less than 3 inches in depth, use ⅜-inch bolts; for depth of 3 to 5 inches, use ½-inch bolts; and for depths over 5 inches, use ⅝-inch bolts as shown in figure 6-5.

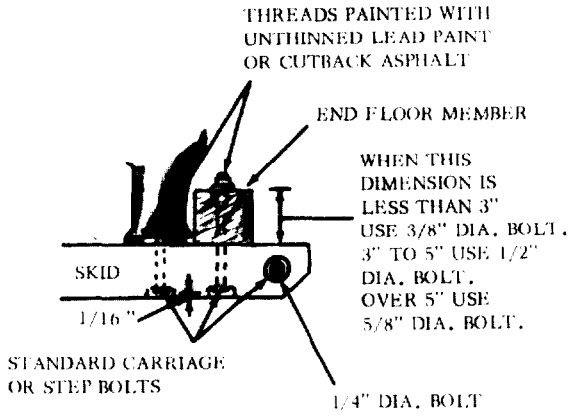

JMPTC 1167

Figure 6-5. Wooden skid and requirements.

(3) *Floorboard and diagonal assembly.* Floorboards and diagonals may be fastened to the skids by nails or bolts depending on the thickness of the material. Floorboards of nominal 2-inch thickness may be fastened to each skid with two nails for 4-inch wide lumber, three nails for lumber over 4 and up to 10 inches wide. Diagonals of nominal 2-inch stock are fastened to the skids with one more nail than is required for the floorboards of the same width. Nail sizes shall be twelve-penny for skids over 2 inches deep. Nails must be coated sinkers or corkers. Floorboards and diagonals over nominal 2-inch thickness are fastened to the skids with bolts. The number and diameter of the bolts for fastening the floorboards are the same as specified for the headers, while one more bolt is required when fastening a diagonal to a skid member.

(4) *Fastening items to skids.* When an item has boltholes in the base that are intended for fastening purposes, they should be used to fasten the item in place as shown in figure 6-3. At least four such fastening points are required.

If there are less than four direct fastening points, supplemental fastenings, such as tie rods, U-bolts, or specially designed brackets or frames, should be used as shown in figure 6-6.

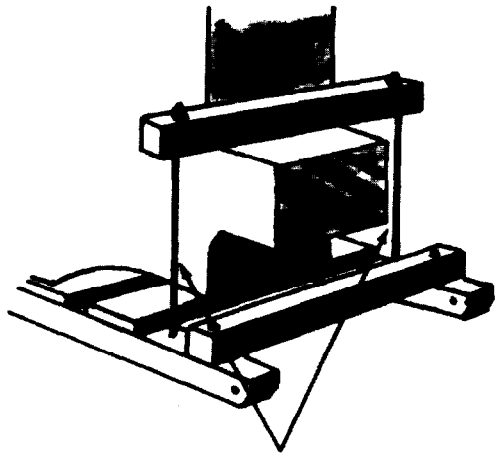

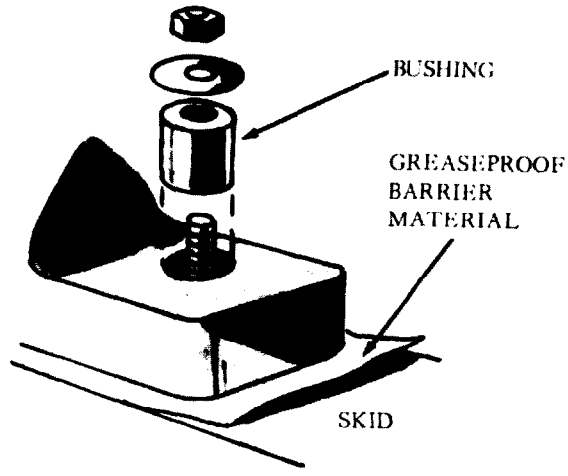

JMPTC 1169

Figure 6-7. Use of bushing to protect tolerance of boltholes in base of item.

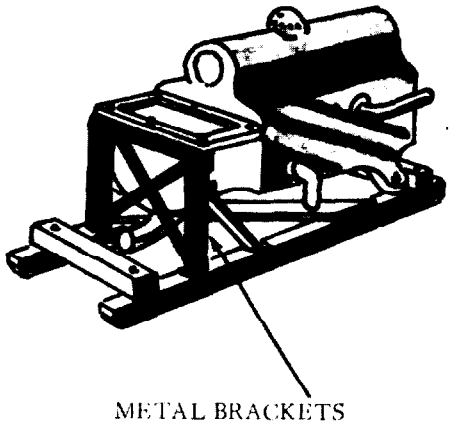

JMPTC 1168

Figure 6-6. Mounting provisions for fastening items to skids.

CAUTION

Do not use lag screws. Standard carriage or step bolts should be used, except when the length of the bolt exceeds the stock length of carriage or step bolts. In such a case, machine bolts may be substituted. When the bolthole in the base is critical and of close tolerance, use a smaller bolt and a bushing for further protection (fig. 6-7).

6-3. Metal Assemblies

The use of aluminum alloys in the construction of heavy-duty skids offers many advantages not obtainable with wooden skids. Aluminum has high strength and reusability, is lightweight, requires no protective paint coating, will not splinter, is resistant to corrosion, and immune to rot, mildew, and vermin, all of which guarantees an exceptionally long service life and eliminates costly maintenance and replacement peculiar to wooden skids.

a. Aluminum Materials.

(1) *Skid members.* Members, such as runner members, crossmembers, accessory members, mounting plates, tie plates, etc., used in the skids shall be of uniform quality, free from all defects and imperfections that might affect the serviceability of the assembled skid.

(2) *Bolts, nuts, etc.* The bolts, nuts, washers, and other items required to assemble the skid are required to be furnished by the contractor.

(3) *Surface requirements for materials.* All items, such as bolts, nuts, washers, and other required to assemble the skid, must be surface treated according to the applicable MS drawing. When specified in the contract or order, the aluminum parts shall be anodized according to Specification MIL-A-8625, Anodic Coating for Aluminum Alloys or equal.

b. Skid Components, Their Use and Application (fig 6-8).

(1) *Runner beams.* Runner beams are used to support the weight of the equipment. In addition,

they are also used to protect the outer extremities of the equipment while supporting the crossbeams to which the equipment is attached.

(*a*) *Requirements of each skid.* A minimum of two runner beams (skids) may be added to provide support to the load-bearing member.

(*b*) *Crossbeams.* All crossbeams utilized on one skid must be of the same length.

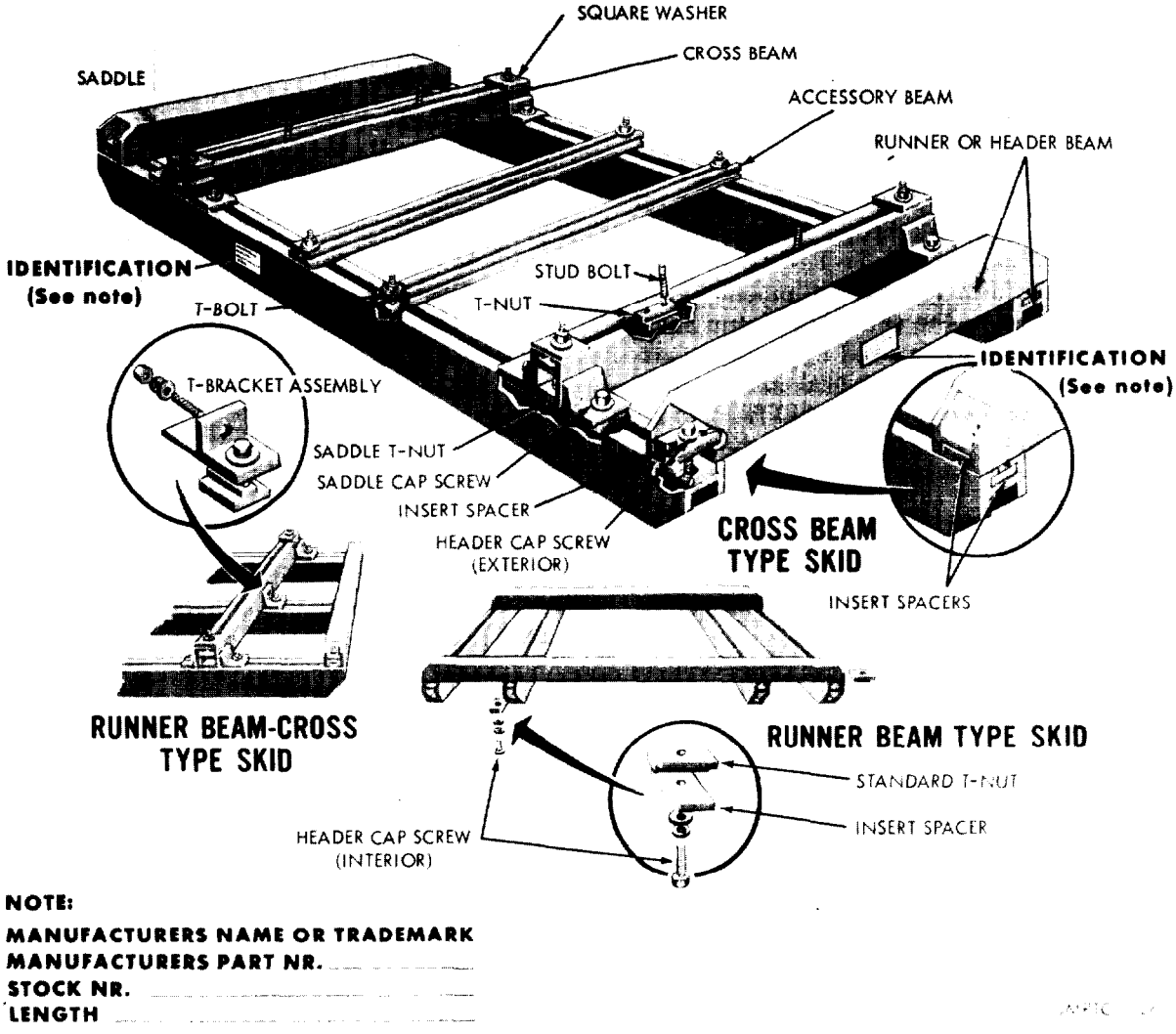

Figure 6-8. Aluminum skid components.

(2) *Header beams.* Header beams are located at each end of the runner beams (skids).

(*a*) They are the main member utilized for attaching the runner beams together.

(*b*) The minimum length of the header beams shall not be less than the maximum width of the equipment being skidded.

(*c*) All runner beams must be attached to both header beams using four bolts at each connecting point.

(3) *Crossbeams.* Crossbeams are used to support the item.

(*a*) The minimum length of the crossbeams must be equivalent to the maximum width of the equipment being skidded.

(*b*) Each crossbeam will support a load dependent on its distribution on the crossbeam. The distance between the front crossbeam and the rear crossbeam is measured parallel to the runner beam.

(4) *Accessory beams.* Accessory beams are used to attach such accessory items as motors, guards, faceplates, coolant pumps, and other accessories to the basic skid. They are also used to add rigidity between the runner beam and the load-bearing crossmembers.

(5) *Miscellaneous hardware.* Miscellaneous hardware consist of studs, T-bracket assemblies, saddle T-nuts, standard T-nuts, saddle, T-brackets, T-bolts, L-brackets, hexagonal nuts, round washers, lockwashers, capscrews (external and internal), capscrews, (saddle), carriage-bolts (T-brackets), squre washers, and insert spacers.

6-4. Selection and Use of Aluminum Skids

Skidding is required to facilitate handling of equipment with mechanical lifting and conveying devices, as shown in figure 6-9. The skids must provide a rigid platform for the equipment by an extreme outer corner of the skid. Aluminum skids have been accepted and approved by various Government agencies. There are several manufacturers of aluminum skids whose skids qualify to do an adequate job. When selecting skids, there are many factors to be considered.

a. Item Characteristics. The physical characteristics of the item being skidded, coupled with the availability of skids, dictate what type and class of skid will be used. Figure 6-9 shows various methods of handling aluminum skids.

b. References. The following references may be consulted for specific details on the skid-mounting of equipment:

(1) MIL-HDBK-701, Blocking, Bracing, and Skidding of Industrial Production Equipment for Shipment and Storage.

(2) Department of the Army TM 38-260, Preparation of Industrial Equipment for Storage and Shipment.

(3) MIL-STD-1791, Air Transportability Requirements, General Specifications for.

(4) MIL-M-18058, Machinery, Metal and Woodworking, Packaging of.

(5) MIL-S-9968(IP), Skid Components, Aluminum, Reusable.

(6) Defense Logistics Agency Manual, DLAM 4215.2, Operations Manual for Storage Maintenance of Defense Industrial Plant Equipment.

c. Precautions in the Use of Skids.

(1) Do not substitute wood components in lieu of aluminum components on aluminum skids.

(2) Do not mount more than one machine in each skid assembly.

(3) Be sure all skid bolts are tight.

(4) Do not sue undersize skids. If excess deflection in the crossbeam is evident, add another center load-bearing runner beam

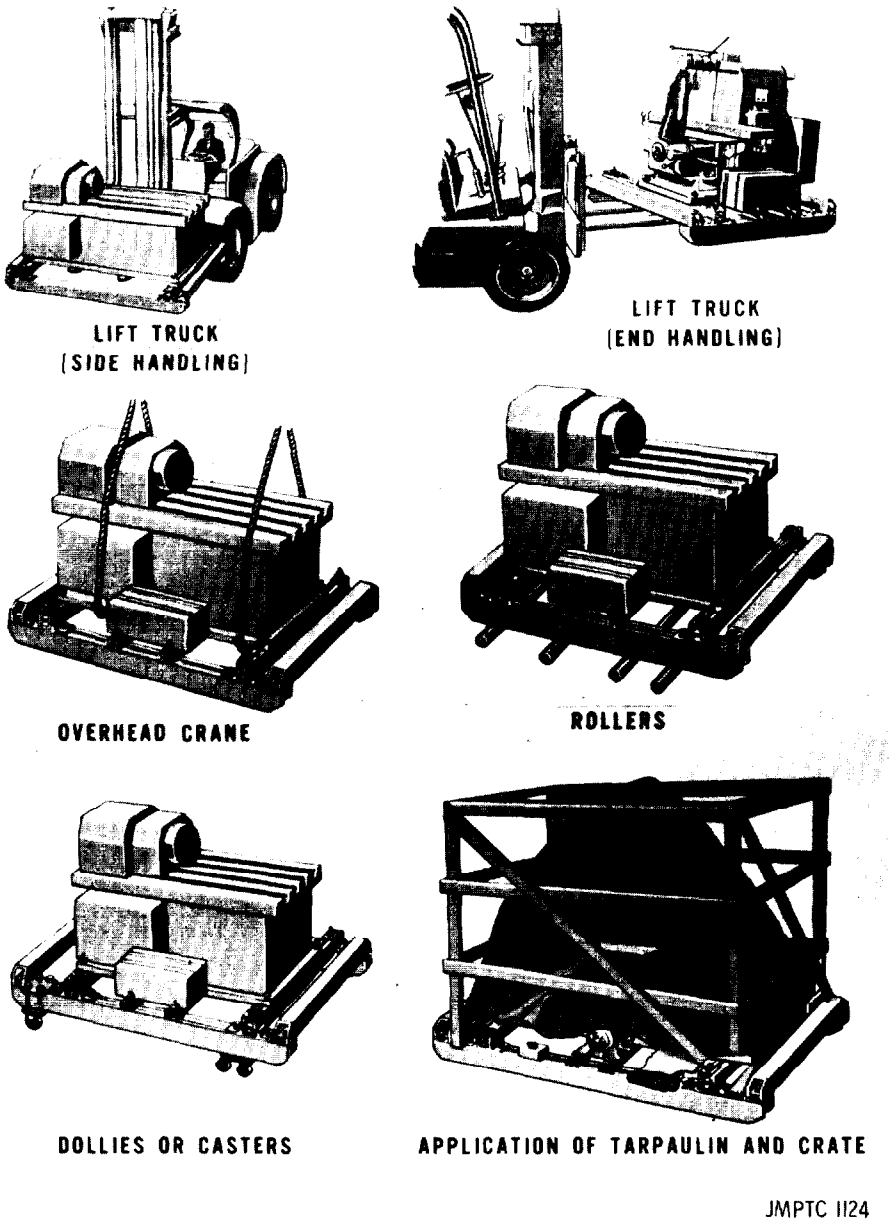

Figure 6-9. Method of handling aluminum skids.

(5) Do not alter the manufacturer's design of the aluminum skid.

(6) Do not use a vertical yoke to hold a machine or machine component to the skid.

(7) Use the largest size holddown bolts to be accommodated.

(8) Use lockwashers and flat washers with holddown bolts.

6-5. Control and Use of Aluminum Skid

At the present time, all DOD-owned aluminum skids are managed by, and their use is controlled by the Defense Industrial Plant Equipment Center. They are limited to the moving of industrial plant equipment. They will not be used for storage of industrial plant equipment. For complete information on the use, management, and control of aluminum skids see chapter 11 of AR 700-43/NAVSUP PUB 5009/AFM 78-9/DLAM 4215.1, Management of Defense-Owned Industrial Plant Equipment (IPE), and MIL-HDBK-701.

CHAPTER 7
SPECIAL BOX AND CRATE SPECIFICATIONS DESIGNED FOR AIRLIFT

7-1. Crates, General

Other shipping containers are discussed in chapters 3 through 5. These containers have certain limitations as to weight of load, size of container, type of load, and other characteristics. The selection of a crate for use in airfreight, in preference to a box or other containers, depends in general upon the degree of protection needed, rigidity requirements, size of item, item characteristics, etc., or a combination of these factors.

a. Definition of a crate. A crate is a rigid container constructed of structural members (wood or metal) fastened together in such a manner as to protect the contents.

b. Use of Crates. Crates are generally selected in preference to boxes for shipment of supplies and equipment when an item exceeds 10 feet in any direction or the net weight of 100 to 1,000 pounds or more. Since there are so many items having different configurations in our supply system in the lower- and middle-weight ranges, some of the other containers may be selected. For many conventional items in the lower- or middle-weight ranges, however, cleated panel fiberboard, cleated panel plywood, or other lighter containers might often result in adequate protection with less tare weight and cube. Thus, the requirements of the item must be carefully evaluated before selecting a crate as a shipping container.

7-2. Classification of Crates

Since there are so many different crate specifications, it is very difficult to give one classification for each crate specification. Crates may be grouped into several categories. They may be classified by construction; i.e., unsheathed (open) or sheathed (covered), as shown in figure 7-1. They may be non-demountable (single-trip crates of nailed construction), bolted, reusable, or demountable. Some crates are designed for general use and others for specific use. Crates may be designed for domestic or oversea shipment. For practical purposes, a classification may include one or a combination of several of the above characteristics.

a. Open Crates. An open crate is a container formed of framing members (wood or metal) without exterior sheathing. There are many standard crates that fit this classification. Open crates derive their strength from the truss-like framework formed by diagonal, vertical, and longitudinal members. These crates may be covered with a lightweight material for watershed protection, but are not to be construed as sheathed crates.

b. Sheathed Crates. Sheathed crates are similar in construction to open crates except that the frame members are completely covered with sheathing material, such as plywood, wood, paper-overlaid veneer, or fiberboard. Sheathed crates not only provide mechanical protection to the contents, but also protect the contents from the elements during outdoor storage.

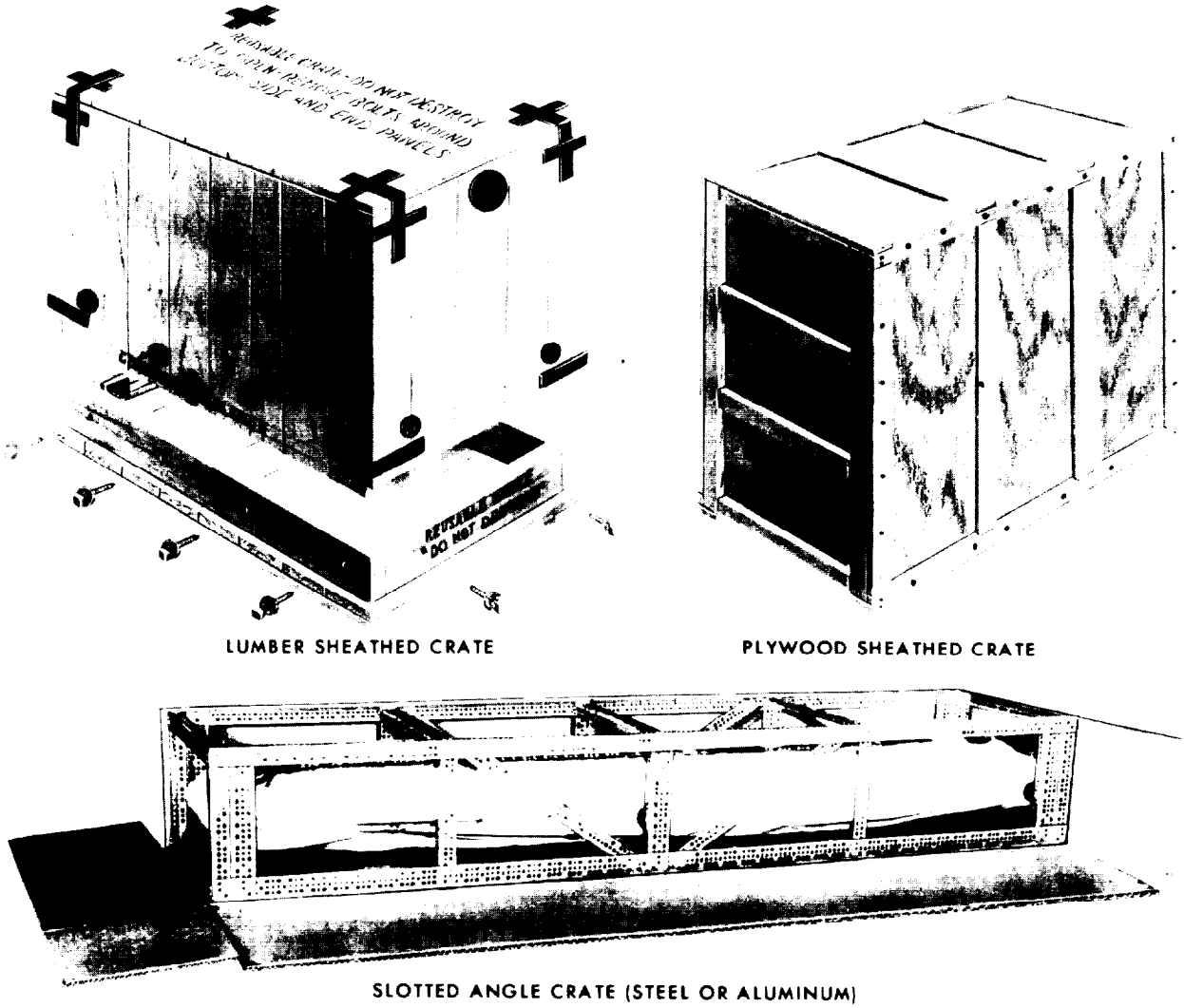

Figure 7-1. Sheathed and unsheathed crates.

7-3. Design and Selection of Crates

Crates must be designed for the item being packed. If a crate is used for an item other than that for which it was designed, inadequate or unnecessary tare weight and excess cube usually result. Therefore, several basic factors must be taken into consideration when selecting or designing a crate.

a. Degree of Protection. To determine the degree of protection for the contents, it is necessary to know the item characteristics, destination, and if possible, the storage, handling, and shipping hazards the shipment may encounter. Open crates are intended for use in air shipment of items not requiring the degree of protection from the weather and handling afforded by boxes or other closed containers. When the characteristics of the contents require some protection from the elements, an open crate should be used with an interior shroud over the contents. If the contents require the maximum amount of protection, a sheathed crate should be used.

b. Degree of Disassembly. When determining the size, weight, shape, and strength of the item, consideration should be given to partial disassembly of the item or its components in order to reduce the overall size of the crate. Items should not be disassembled to the point where special tools or personnel are required for reassembly.

c. Type of Load. Crates are designed to carry all three types of loads: type 1 (easy), type 2 (average),

and type 3 (difficult). However, one should know the characteristics of each type of crate design before selecting a crate.

d. Weight Distribution. When designing crates over 5 feet in length, weight distribution becomes an important factor. Whenever possible, the center of gravity of the loaded crate should coincide with the geometrical center (center of balance) of the contents. The center of balance should always be marked on the crate (MIL-STD-129).

e. Anchoring the Contents. One should make a thorough study of the contents in order to ensure that provisions are made for anchoring and protection of contents within the crate. Anchoring, cushioning, and blocking contents within the crate will prevent damage to the contents during handling and transporting. Refer to MIL-STD-1186, Cushioning, Anchoring, Bracing, Blocking, and Waterproofing; With Appropriate Test Methods, for details on anchoring.

(1) Use internal blocking, cushioning, or padding wherever needed to prevent lengthwise, sidewise, or vertical movement and also to prevent abrasion to the contents. Whenever possible, the blocking and bracing should be designed to fasten to one face of the crate, preferably the bottom.

(2) Bolts, steel strapping, soft iron bars, tie rods, and lumber holddowns are acceptable methods for supporting and anchoring the contents.

(3) Some items are designed with holddown features to be utilized in handling and shipping. When this does not exist on an item, use the stronger areas of the item for blocking, bracing, or tie downs.

(4) For fragile items, use some form of material to protect the contents from damage due to puncture while in transit. Wire mesh or other lightweight materials, such as paper-overlaid veneer, have been used over fragile areas to prevent damage due to puncture.

(5) Use shrouds or waterproof wraps for open crates to protect the contents from the elements (water, dust, or other foreign materials). The item must be satisfactorily blocked, braced, and cushioned against the forces imposed during handling and transportation.

f. Clearance. When designing or selecting a crate, normally a minimum of 1-inch clearance is required between the contents and the nearest framing member of the sides, ends, and top. This clearance allows for distortion and vibration to which the crate may be subjected during rough handling in transit.

(1) Items that are fragile in nature or items within floating bag barriers (submethods IA-16, IIa, of specification MIL-P-116, "Methods of Preservation") require a minimum of 2 inches of clearance. Additional clearance may be required for shock-mounted items.

(2) Through careful design, it is often possible to allow protruding points of the item to extend between the joists, or the joists may be spaced, within specified limits, to accommodate such protrusions.

g. Handling. Crates are designed to be handled by forklift trucks, dollies, slings, grabhooks, and other materials-handling devices. The base of the crate must be strong enough to support the contents without distortion. Sling supports on the base provide a means for handling large crates. Spreaders should be used to distribute the weight over a greater area.

h. Storage Factors. The major hazard imposed by storage is superimposed loads. Crates are usually designed to sustain three times their own weight, provided they are of equal size and same-weight-carrying capacity. This load is transmitted to the sides and ends onto the base of the crate.

i. Types of Bases. The selection of a skid or a sill base will depend on the physical characteristics of the item to be crated.

(1) *Sill bases.* Sill bases are designed for items that can be supported above their lowest point. Examples are transmission housings, engines, and vehicles with brakedrums projecting below the frame or axles. Savings in height should be more than 6 inches before substituting a sill base for a skid-base.

(2) *Skid bases.* Skid bases are designed to accommodate loads that can be supported on their lowest portion or items that are made to rest flat on their bases. Skid-type bases are preferred in most cases; however, when the item must be supported above its lowest point, the use of a sill base will reduce the overall height of the crate.

7-4. Open Wood Crates, General

a. Open Wood Crates. Open wood crates described in this section are designed for general use and are employed for both domestic and overseas air shipments. Only items which are not readily damaged from outside forces and which require limited protection should be shipped in open crates. Usually items which are designed for outdoor use or are of rugged construction are shipped in open crates. When there is a variety of items to be shipped, each crate should be designed for each item.

b. Cube Reduction. Crates should be designed of the smallest dimension consistent with adequate

rigidity, strength, and protection to the contents against external loads which may be applied incident to handling, shipment, and storage. If cube can be saved by disassembling the items and crating in two or more shipping containers, this method should be considered. However, the advantage of minimum cubage should be carefully weighed against the increase in time and labor of disassembly and reassembly of the items at destination.

7-5. Special Class of Wood Cleated Boxes and Slotted Angle Crates

There are two principal container specifications, one box spec and one crate spec, which offer maximum protection for items intended for airlift and, yet, have relatively light tare-weight construction features. These containers are found in the following specifications:

a. MIL-B-26195, "Boxes, Wood Cleated, Skidded, Load-Bearing Base, (2,500 pounds Maximum Net Load)."

b. MIL-C-9897 (USAF), "Crate, Slotted, Angle, Steel or Aluminum, or Lightweight Airframe Components and Bulky items (for maximum of load 3,000 pounds)."

7-6. Boxes, Wood Cleated, Skidded, Load-Bearing Base (2,500 pounds, Maximum Net Weight)

Specification MIL-B-26195 covers the requirements for wood cleated boxes with skidded load-bearing bases.

a. Classification and Limitations. MIL-B-26195 boxes are designed to carry loads up to 2,500 pounds and not to be greater than 16 feet in length. These boxes are classified by types, styles, classes, and grades as follows:

(1) Type I, for domestic shipments.

(2) Type II, for overseas shipments.

(3) Style A, Regular cleating arrangement.

(4) Style B, Lock corner cleating arrangement.

(5) Class 1, plywood base.

(6) Class 2, lumber base.

(7) Grade I, standard.

(8) Grade II, fire retardant.

b. Design features. MIL-B-26195 cites the use of plywood, fiberboard, or paper-overlaid veneer in accordance with specifications PPP-B-576, PPP-B-591, and PPP-B-601. Ventilation holes or slots with baffles are placed on each end, or at ends and sides, or around the perimeter of the box. Skid bases, constructed with lumber and plywood, are attached to its superstructure with lag bolts.

c. Intended use. The superstructure, consisting of the ends and side panels, is attached to the base with lag bolts and is intended to be used only for superimposed loads or for protection against the elements. This container is used to protect items which can be securely anchored or attached to a load-bearing base.

d. Advantages. It is demountable and may be stacked, stored until ready for use. Its superstructure may or may not be used, therefore cube and weight reduction are possible. The overall design of the MIL-B-26195 renders it as a special box for airlift operations.

7-7. Other Shipping Containers for Aircraft Components

a. Shipping Containers and Packaging Instructions. Other shipping containers and packaging instructions in the form of Technical Orders, Special Packaging Instructions (SPI), Military Sheet Standards, or other Air Force Instruction Sheets have been prepared for fuel tanks, ailerons, elevators, rudders, stabilizers, tail sections, and other component parts of various aircraft. These containers often include an open crate for air shipment and a reusable, sheathed crate for surface shipment. The sheathed crate protects the open crate during surface transport, but is required to be removed for air shipment. In other situations, only the open crate for air shipment has been designed.

b. Drawings and Photographs. The packaging instructions contain drawings and photographs, a list of materials required to build the containers, the procedures to follow during packing and assembly, and marking operations. The shipping container and packaging instructions shall be used for the packing of any aircraft component for which they have been written.

7-8. General Purpose Crates

In addition to the special lightweight crates specifically designated for airlift, there are other general purpose crates that may be used to pack material for airlift. The basic difference between the lightweight crates and general purpose crates is that lightweight crates are constructed with narrow, thin members to achieve a minimum of tare weight. Thus, the lightweight crates require preferential handling. They should be handled with forklift trucks and never lifted with slings or grabhooks. Refer to table 7-1, which is designed as a cross-reference to the table of contents of DLAM 4145.2, Vol II/TM 38-230-2/NAVSUP PUB 503, Vol II/AFP 71-16/MCO P4030.21. It will serve as a guide in locating specific crates that have been de-

signed for air and surface shipment. However, due to the numerous Federal and military specifications on crates, all crates are not covered in the reference above.

Table 7-1. Cross-Reference Guide to Other Crates.

Crate	*Specification*	*Vol. II DLAM 4145.2*
Crates, wood, open and covered (maximum load, 4,000 pounds)	MIL-C-52950	Para 6-3 through 6-11.
Crates, wood, open 12,000- and 16,000-pound capacity	MIL-C-3774	Para 6-12 through 6-14.
Crates, wood, lumber and plywood sheathed, nailed and bolted	MIL-C-104	Para 6-15 through 6-17.
Crate, slotted angle, steel or aluminum, for lightweight airframe components and bulky items (for maximum loads of 3,000 pounds).	MIL-C-9897	Para 6-18.

CHAPTER 8

CONTAINER SELECTION

8-1. Introduction to Container Selection

Most all of the commonly used shipping containers that are utilized for air shipment are outlined in chapters 4, 5, 6, and 7. Other shipping containers that are not included in this manual may be found in DLAM 4145.2/TM 38-230-1/NAVSUP PUB 502/AFP 71-15/MCO 4030.31A and DLAM 4145.2, Vol II/TM 38-230-2/NAVSUP PUB 503, Vol II/AFP 71-16/MCO P4030.21. In deciding which is the proper container to use, the characteristics of the article to be packed must be considered. The different kinds, styles, types, and classes of containers are also adequately described along with the uses and limitations, in order to provide for the different situations and conditions to which the containers are subjected. Here, again, emphasis is placed upon the reduction of weight and cube consistent with the degree of protection and operational needs, as the most important factors. Where the choice falls between the use of two or more different containers, each offering the same degree of protection, choose the container that will keep the tare weight to a minimum.

8-2. Container Requirements

Before selecting a container, one should be familiar with the characteristics of container materials, limitations of the containers, characteristics of the item, degree of protection required, use of the containers, methods of closure, handling procedures, safety requirements, logistic environment, and operational needs.

a. Materials. All materials used in fabricating containers must conform to the applicable specification, outlined in tables 8-1, 8-2, and 8-3. Permission to use materials which are not covered by specifications should be granted by either the shipping or procuring activity.

Table 8-1. Interior Containers—Selection by Weight of Contents and Size of Containers.

Selection	*Description*	*Size limits [1] (max)*	*Weight of contents (max)*	*Remarks*
	BAGS, SLEEVES AND TUBING: INTERIOR PKG Class A	Not restricted	10	Waterproof and electrostatic field force protection.
	Class B	Not restricted	[2] 10	Waterproof protection.
MIL-B-117 [4]	Class C	—[2]	[2] 10	Waterproof and greaseproof protection.
	Class E	—[2]	[2] 10	Greaseproof, waterproof and watervaporproof protection.
	Class F	Not restricted	[2] 10	Watervaporproof and electrostatic field force protection.
	Class G	Not restricted	[2] 10	Watervaporproof, greaseproof, and flame resistance protection.
MIL-B-22020	BAGS, TRANSPARENT, FLEXIBLE, SEALABLE, VOLATIVE CORROSION INHIBITOR TREATED.		5	Storage (36 months) and shipboard use.
PPP-B-566	BOXES; FOLDING, PAPERBOARD.	2,500 cu in	20	14 styles.
PPP-B-676	BOXES; SETUP PAPERBOARD		10	4 types, 5 classes, 4 styles, 4 varieties.

Table 8-1. Interior Containers—Selection by Weight of Contents and Size of Containers.—Continued

Selection	*Description*	*Size limits [1] (max)*	*Weight of contents (max)*	*Remarks*
PPP-B-636	BOX, SHIPPING FIBERBOARD			
	Overseas	120 in	[3] 225	
	Domestic	120 in	[3] 160	
PPP-B-665	BOXES; PAPERBOARD, METAL EDGED AND COMPONENTS.	2,000 cu in	40	9 styles.
MIL-C-3955	CAN, COMPOSITE, SPIRALLY WOUND.	7⅛ in. dia × 60 in. long.	20	
MIL-D-6054	DRUM, METAL-SHIPPING AND STORAGE.	in. dia 30"; in. HT 41".	[3] 350	Drums with inside diameters 10.50, 13.81 & 15.38 are required to withstand internal pressure of 15 PSI. They are as overpacks for liquid semi-liquid hazardous material packed in containers not meeting 15 PSI requirements for Military air transport.
MIL-D-6055	DRUMS, METAL REUSABLE SHIPPING AND STORAGE (CAP. FROM 88 TO 510 CUBIC INCHES).	88 to 510 cu in		Reusable drum—MS24347. Available in aluminum or steel.

Notes:
[1] For boxes, figure denotes internal volume or sum of length, width, and height.
For bags, figure denotes total inside dimensions computed by adding the width and length of one flat side.
For cylinders, figure denotes internal volume.
[2] Refer to MIL-B-117, for size and weight of contents for several of these bags.
[3] Maximum weight of contents and containers.
[4] The use of comparable transparent and opaque material in the same bag will be permitted, i.e., transparent sheet heat sealed to opaque sheet.
(Refer to specification MIL-B-117 for materials.)

Table 8-2. Exterior Containers—Selection by Maximum Weight of Contents.

Specification	*Description*	*Weight limits (lb)*	*Remarks*
	BOXES, SHIPPING, FIBERBOARD		
	Overseas	[1] 225	Size limitation—120 in. (L+W+H).
PPP-B-636	Domestic	[1] 160	Size limitation—120 in. (L+W+H). Weight limitation of Mullen Test selected shall apply.
	BOXES; FIBERBOARD WOOD CLEATED		
	Overseas	200	2 styles; size limitation—4 LX3'WX3'H.
PPP-B-591	Domestic	400	11 styles; weight limitation of specification shall apply to style selection.
	BOXES; WOOD, CLEATED, VENEER PAPER OVERLAID		2 styles.
PPP-B-576	Domestic	400	
	Overseas	350	
PPP-B-585	BOXES; WOOD, WIREBOUND	[2] 500	3 styles, 3 classes of use. Overseas and domestic use.

Table 8-2. Exterior Containers—Selection by Maximum Weight of Contents.—Continued

Specification	*Description*	*Weight limits (lb)*	*Remarks*
PPP-B-601	BOXES; WOOD, CLEATED PLYWOOD	[2] 1,000	4 styles for overseas and for domestic use. Weight limitation of specification shall apply to style selection.
PPP-B-640	BOXES; FIBERBOARD, CORRUGATED TRIPLE WALL.	[3] —	7 styles; two classes: Non-weather resistant (domestic) and weather resistant (overseas). Size limitation: See PPP-B-640.
PPP-B-621	BOXES; WOOD, NAILED AND LOCK-CORNER.	50 to 1,000	6 styles for overseas use; 8 styles for domestic use. May be modified by inclusion of skids.
MIL-C-25731	CRATES; WOOD, FOR DOMESTIC AND OVERSEA SHIPMENT OF AIRFRAME COMPONENTS.	2,000	7 types and 2 classes: demountable, semi-demountable, and nondemountable; open and sheathed; inner and outer crates; with or without skids.
MIL-C-9897	CRATES; SLOTTED ANGLE, STEEL OR ALUMINUM. FOR LIGHTWEIGHT, AIR-FRAME COMPONENTS AND BULKY ITEMS (FOR MAXIMUM LOADS OF 3,000 POUNDS).	3,000	For lightweight airframes or bulky items. 2 styles, 2 types, 2 grades.
MIL-C-52950	CRATES, WOOD, OPEN AND COVERED	4,000	5 types, 2 styles, overseas and domestic use.
MIL-C-22806	CRATES; SHEATHED, WOOD, WIRE-BOUND.	5,000	2 types and 2 styles, overseas and domestic use.
MIL-C-3774	CRATES; WOOD, OPEN 12,000 AND DS 16,000 POUND CAPACITY.	12,000 and 16,000	Bolted or nailed assembly. Overseas or domestic use.
MIL-C-104	CRATES; WOOD, LUMBER AND PLY-WOOD SHEATHED, NAILED AND BOLTED.	30,000	2 types, 2 classes and 2 styles; size limitation—30'L×9'W×10'H (unless otherwise specified). Overseas or domestic use.

Notes:
[1] Maximum weight of contents plus container.
[2] Greater weights of contents may be permitted. See PPP-B-585 and PPP-B-601.
[3] Maximum weight not specified, but limited by anticipated load. Refer to PPP-B-640.
Notes.
(*a*) L—Length, W—Width, H—Height.
(*b*) Specifications are listed in order of their maximum load limitations. Selection should be made, when practicable and suitable, in the order of the containers listed to reduce weight, cube, and transportation costs.

Table 8-3. Special Containers-Based on Weight and Size Limitations.[1]

Specification	*Description*	*Size limits*	*Weight limits (lbs)*	*Remarks*
MIL-E-6060	ENVELOPES: PACKAGING WATER VAPORPROOF, FLEXIBILE.			For floating bag application and packages containing inspection windows.
PPP-C-96	CAN: METAL, 28 GAGE AND LIGHTER.	2 oz to 5 gal		9 types, 9 classes.
PPP-D-729	DRUMS; SHIPPING AND STORAGE, STEEL, 55-GALLON. (208 LITERS).	55 gal		Equivalent of DOT 5A, 5B, 5C, 5D, 17E & 17H.
PPP-D-723	DRUM, FIBER	75 gal	700	Domestic or overseas use.

Table 8-3. Special Containers-Based on Weight and Size Limitations.[1]—Continued

Specification	*Description*	*Size limits*	*Weight limits (lbs)*	*Remarks*
MIL-D-6054	DRUM; METAL-SHIPPING AND STORAGE.	3 to 80 gal		MS27683 and MS27684; exterior use; for overpackaging and for aeronautical materials.
MIL-B-9361	CONTAINER, REUSABLE, SHIPPING AND STORAGE, DISASSEMBLED, NESTED EXTERNAL AIRCRAFT FUEL TANKS.			For nested external aircraft fuel tanks.
MIL-B-26195	BOXES, WOOD CLEATED, SKIDDED, LOAD-BEARING BASE.	up to 600 cu ft/16 ft in length.	2,500	2 types, 2 styles, 2 classes, and 2 grades.
MIL-C-11133	CRATE; WOOD, OPEN, WIRE-BOUND.		1,000	Slatted-style; wire-bound; domestic use.

Note. L—Length, W—Width, H—Height.
[1] Special containers should be selected on basis of minimum weight and cube in order to reduce transporation cost.

b. Weight and Size Limitations. The gross weight of the container should not exceed the weight limitations outlined in tables 8-1, 8-2, and 8-3. All packages and containers should be selected on the basis of holding the weight and cubic displacement to a minimum consistent with the degree of protection required. Packages and shipping containers utilized for identical items and same quantities should be uniform in size.

c. Disassembly of Items. Items that can be disassembled in order to reduce cubic displacement should be disassembled to the extent practicable, provided that disassembly will not alter calibrations or settings which may affect the desired operation of the item. In addition, special tools and skills should not be required to place the item in operation.

d. Preservation and Packaging. Preservation of military items and equipment should be as specified in the contract or order. Refer to specification MIL-P-116 and the "Packaging Manual;" Vol. I (para 5 of the Introduction to this manual).

e. Packing Requirements. Shipping containers utilized in packing operations are established by specifications, directives, packaging data sheets, technical orders, or by other authority. In instances where a group of containers is authorized, or when the container is not specified, the responsibility of selecting the appropriate container must be determined by qualified packing personnel. Refer to the "Packaging Manual" for detailed requirements on exterior containers.

f. Use of Exterior Containers. Exterior containers or pallets should be used for the purpose of assembling multiples of items of intermediate packages into a unit load (consolidation), or for the purpose of providing a protective enclosure to a single item.

(1) All irregularly shaped items should be fastened, blocked, braced, or anchored to prevent free movement of the item within the container or other shipping media (chap 8).

(2) The selection of the exterior container or pallet should in all instances favor the smallest and lightest container permitted by the applicable specification.

g. Use of Pallets. All pallets should be made of the lightest weight materials, yet providing the degree of protection required for the contents.

(1) Consideration should be given to standard size pallets with the base measuring 40 inches in length by 48 inches in width with provisions for four-way entry in order to be handled with standard materials-handling equipment.

(2) Whenever possible, all unit loads should be palletized and securely strapped to flat pallets, utilizing approved strapping materials (Military Standard MIL-STD-147, Palletized Unit Loads on 40″ × 48″ Pallets).

(3) The gross weight of palletized loads should not exceed 3,000 pounds for domestic shipments and 3,000 pounds for oversea shipments.

NOTE

Refer to DLAM 4145.2 Vol II/TM 38-230-2/NAVSUP PUB 503, Vol. II/AFP 71-16/MCO P4030.21 for additional information on the construction and use of pallets.

h. Closure of Containers. The closure of all containers should be in accordance with the procedures described in the appendix to the applicable container specification. When the container specification is not available, closure should be in accordance with the requirements of similar containers. See chapters 3, 4, 5, and 6 of this manual and Volumes I and II of the "Packaging Manual."

i. Lifting Procedures. Exterior containers and palletized loads exceeding 200 pounds gross weight would be provided with skids or rubbing strips with a minimum clearance of 3 7/16 inches in order to be handled by forklift trucks or due lifting devices.

8-3. Selecting a Shipping Container

The unit cost of air cargo varies proportionately with the weight and cube, particularly weight. It becomes essential, therefore, to reduce to a minimum the weight of packaged and packed material which is being shipped by air. Since the weight of the item will remain the same, the weight reduction will have to be made in the pack. This should be accomplished by providing the necessary protection to the item. Selecting the correct container for a delicate item, such as a chronometer, or for a heavy solid item, such as an anvil, presents no great problem. Unfortunately, there are several thousand items in our inventory that do not fit either extreme and decisions will have to be made on the best suitable container. Decisions are only valid when they are based on the facts bearing on the problem. Let us consider and evaluate some of the factors stated below before selecting a container.

a. Selection Factors. The following factors must be given consideration before selecting a container.

(1) *Destination.* Shipping container requirement will vary depending on whether the item is destined for overseas shipment. Containers destined for overseas are usually stronger than those used for domestic shipment. The degree of protection required will have a bearing on the type of container selected. Consideration should be given to freight regulations because they govern the construction of shipping containers and set forth the procedures for loading and shipping materials by common carrier.

(2) *Characteristics of the item.* In selecting the proper container, packaging personnel should know some of the physical characteristics of the item such as the size, fragility level, weight, and weight distribution. The weight of the item will determine the type of container that may be used and, in turn, transportation cost and the manual or mechanical handling requirements.

(3) *Type of load.* The type of load, or the ability of an item to add strength or to cause damage to the faces of the container is also an important factor in selecting a container. The internal and external forces involved in handling and transportation will vary for the different types of loads. If the container selected is not subjected to appreciable loads, it can be fabricated of lightweight material. If structural strength or rigidity is required to resist loads, then the container selected must be strong enough to resist the loads imposed during handling, stacking, and shipping operations.

(4) *Cost of container.* The initial cost of the container includes that which accrues in the first shipment. This is the cost of materials and labor. To keep cost to a minimum, select the container that will provide adequate protection, will be economical to fabricate, efficient to assemble, and utilizes minimum labor and materials.

(5) *Weight and cube.* Tare weight and cube will either increase or decrease shipping costs. To achieve minimum tare weight and cube, select a shipping container for a given item offering the degree of protection required, yet, when compared with other containers, having the least tare weight and cube. Selection should be confined, whenever possible, to containers that are readily available within our supply system.

(6) *Ease of assembly and closure.* Ease of assembly and closure is a prime consideration for some items. Large containers, such as engine containers or other special purpose containers, should provide easy access to permit installation or removal of contents. In cases of this nature, containers should be selected having closures and fasteners that require minimum packing and unpacking time, commensurate with security of the packed item. When items do not require a quick reaction time, a simple and economical type of closure should be used because closures are closely related to the cost of container.

(7) *Reusability of container.* There are many factors that must be considered as to whether or not a reusable container will be selected. Reusable containers are useful for protecting repairable items or items that are critical in nature which may have to be returned from the field where packing facilities are limited and inadequate to supply the necessary protection. Reusable containers should be selected when they are economically and logistically practicable.

(8) *Other factors.* Factors such as availability of the container should be ascertained. Current packaging instructions should be checked to see

whether or not a special air cargo container is designed or recommended for the item being packed.

(9) *Hazardous material.* Containers must meet requirements of the applicable regulations as listed in paragraph 4-3*a*(3).

b. The Container Selection Chart. The container selection chart for air shipments is designed to serve as a guide for the packer or repacker as to the containers that will furnish adequate protection with the least possible tare weight for air shipment. The chart will not solve all the problems involved in the selection of lightweight containers for certain specialized articles but will help the packer select adequate lightweight containers for most of the articles being shipped by air. However, metal containers will be considered although they are not covered in the chart. It is not intended to prevent the use of metal containers, interior or exterior, if they are found necessary or economical for the purpose intended. This chart appears in figure 8-1.

c. Use of Chart. The chart is based on a series of questions that require a simple "yes" or "no" answer. Each question on the chart contains a numbered reference. These references, given in the paragraphs below, contain information which will help in answering each question. The first question, for example, reads "Can item be shipped without exterior container?" If, after a study of reference 1, the question is answered "yes," the packer will follow the arrow leading to the directions "Ship without container." If the question is answered "no," the arrows leads to the next question. By following the arrow in this manner, the packer will be led to the preferred container or method for shipping the item(s) he is planning to pack. The chart may lead the packer to several containers from which he will choose the one most suitable for the item.

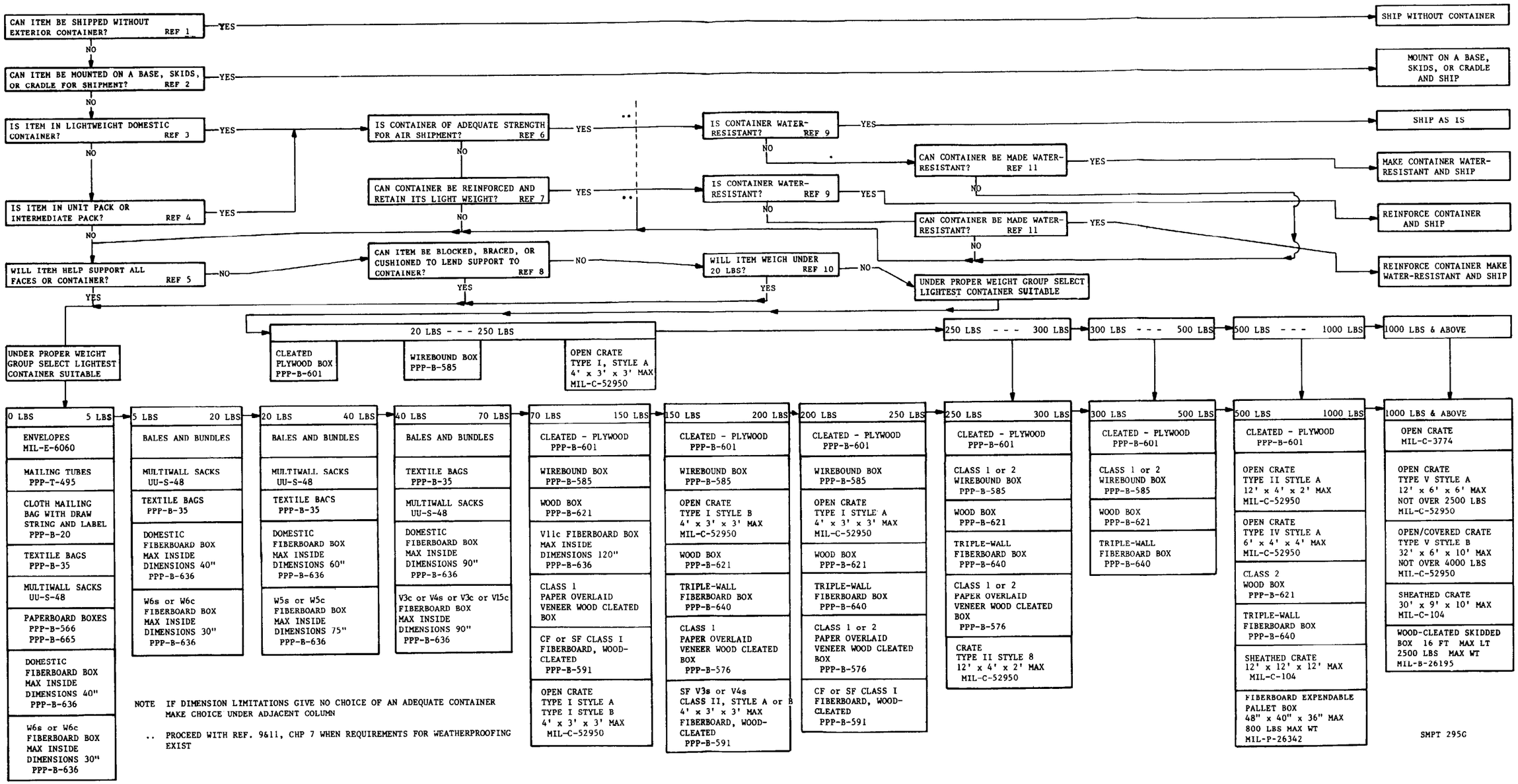

Figure 8-1. Container Selection Chart for Air Shipment.

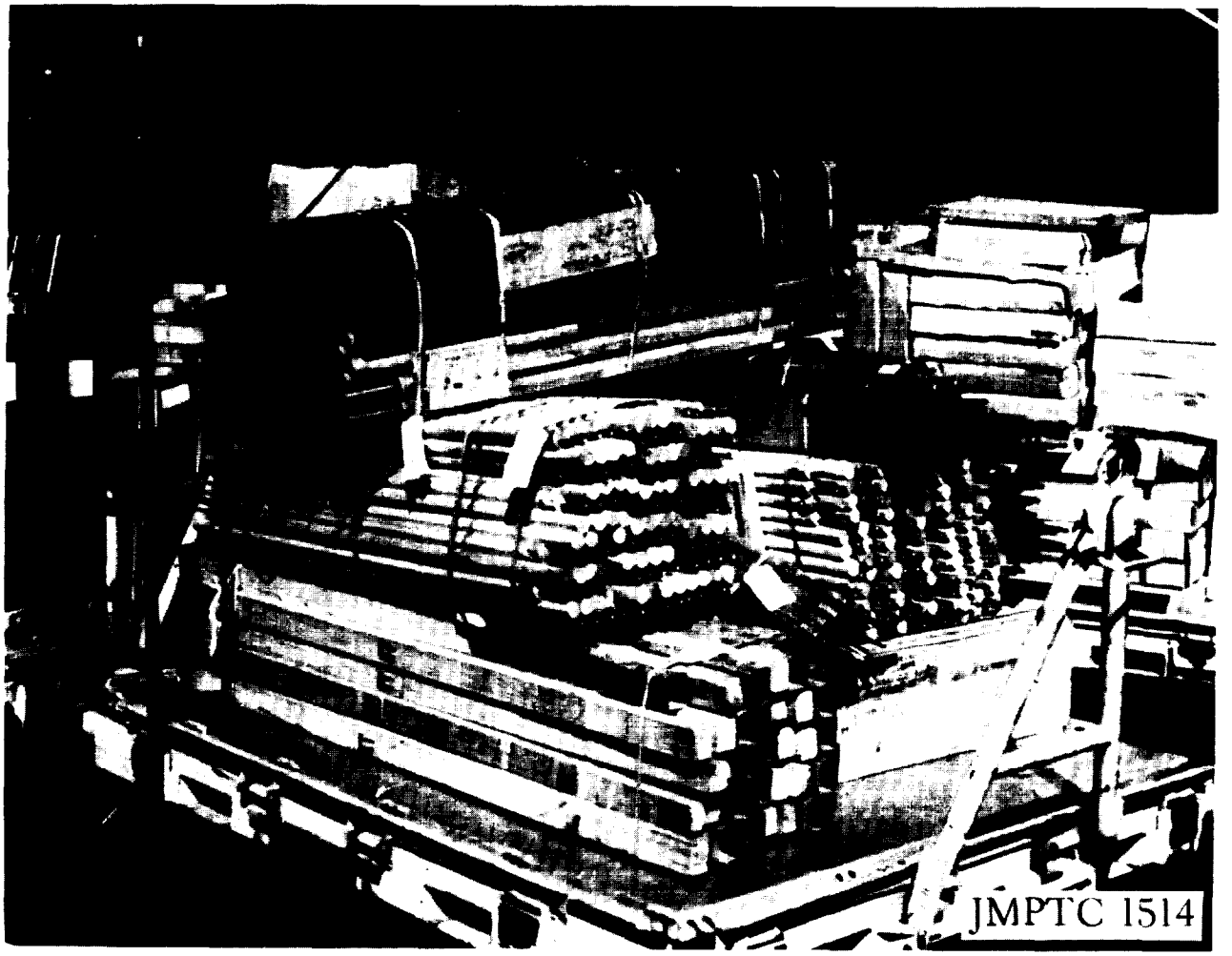

Figure 8-2. Items not requiring an exterior container for air shipment.

d. Chart Reference 1—Can Items be Shipped Without Exterior Containers?

(1) *Outdoor-type items.* The item must be thoroughly studied, and the packer must use sound judgment and common sense when answering this question. Stowage and tiedown problems aboard the aircraft must again be considered. A small, rugged, irregularly shaped item fulfilling all requirements might waste space aboard the aircraft because its irregular shape would prohibit other items or containers from being stacked on top. Such items should be provided with lightweight framework in order to facilitate loading and stowage. In general, however, an item can be shipped by air without an exterior container if it meets the following requirements:

(*a*) Material must be of a size, shape, and weight which can be conveniently handled either manually or by mechanical means.

(*b*) An item must be rugged and shock resistant enough to withstand hazards of transportation, handling, and tiedown equipment. Metal rods, tubing, and strips are not safe for air shipments unless packed so they can be firmly held in place. Long loads, particularly, must be loaded fore to aft in the aircraft. A sudden acceleration or deceleration could cause the rods to keep moving, unless firmly kept in place. Packs for rods must have sturdy end pieces to prevent lengthwise motion. Fiber tubes with wood ends nailed in place are recommended for this type material. NAVSUP INST 4030.26 provides instruction for preparation of safe packs for metal products.

(*c*) An item must be intended for use under general outdoor conditions or painted or preserved so that it can withstand outdoor exposure for limited periods of time. Illustrated in figure 8-2 are examples of items that may be shipped by air without exterior containers.

(*d*) Exterior containers may be required for some items shipped to the air terminal by surface transportation; part of or all of such containers may be removed before shipping by air, provided local delivery will be effected at the destination air terminal.

(2) *Rugged items requiring covers.* Many items rugged enough to withstand impact and other forces may have surfaces which requires protection from abrasion. This protection can usually be accomplished by simple wraps or covers of kraft paper, cellulosic wadding, felt canvas, plastic covers, or other cushioning materials as shown in figures 8-3 and 8-4.

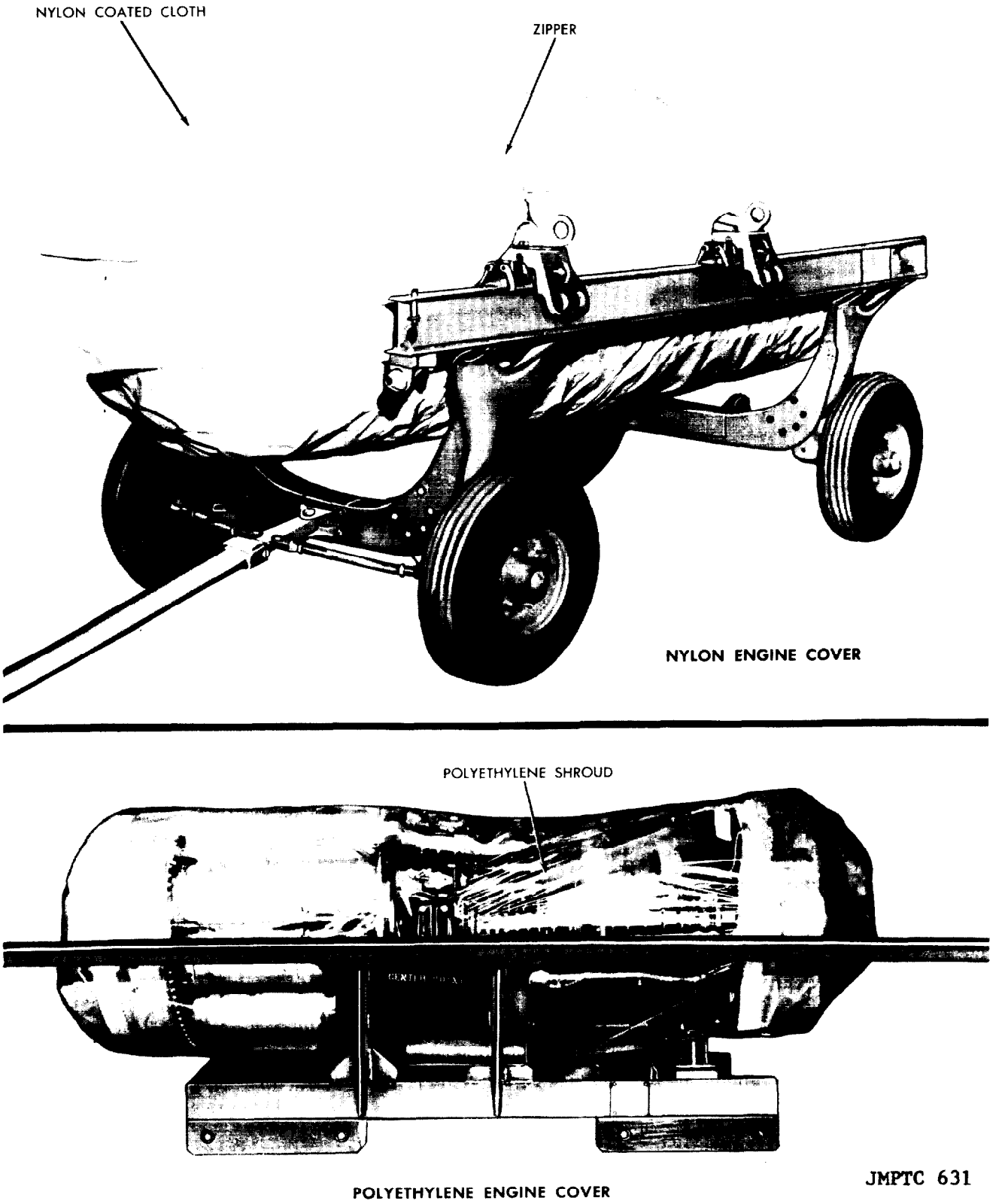

Figure 8-3. Aircraft engines protected with nylon or polyethylene covers.

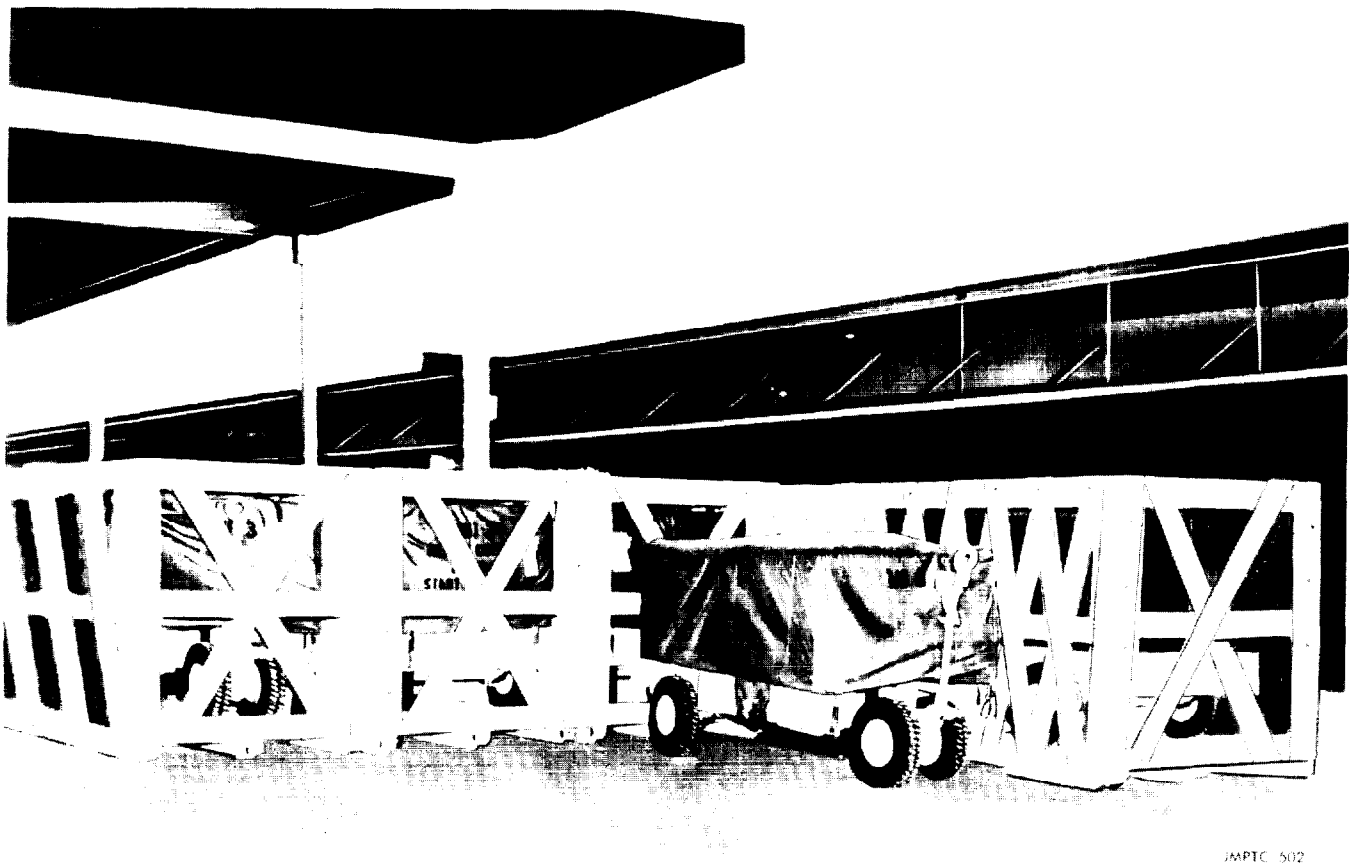

Figure 8-4. Heater protected with canvas cover.

(3) *Luggage-type items.* Items packed in conventional trunks, lockers or other forms of luggage, or in sturdy rigid carrying cases do not need exterior containers unless the surface of the case is subject to damage by abrasion, in which instance a protective wrap or cover should be used.

(4) *Bulk materials.* Bulk materials, including liquids, powders, granular substances, or other materials normally packaged in standard containers, such as multiwall or textile laminated bags, barrels, kegs, pails or drums, do not need the additional protection of an exterior container. Glass containers do not fall in this category. When a container is required for surface shipment, but not for air shipment, the load should be handled as explained in *f* below.

e. Chart Reference 2—Can Material Be Mounted on a Base, Skid, or Cradle for Shipment? Material that meets the requirements of chart reference 1, but which is too heavy (that is, over 200 pounds) for manual handling, should be mounted as shown in figure 8-5, on skids, bases, or cradles so that it can be handled by mechanical equipment. Again, the packer must consider stacking and stowing aboard the aircraft. Some skidded items might waste space by preventing other items from being stacked on top of them. In most cases, large items, such as the machine tool illustrated in figure 8-6, would be so heavy that nothing would be stacked on top in any event. Smaller and lighter items should be provided with a light framework to facilitate stacking, as shown in figure 8-7.

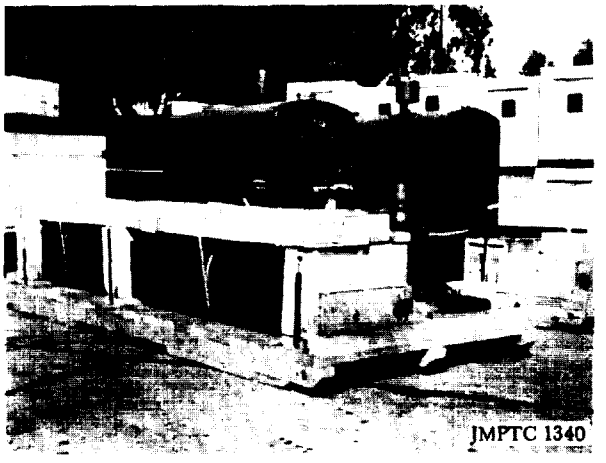

Figure 8-5. Item mounted on skid base.

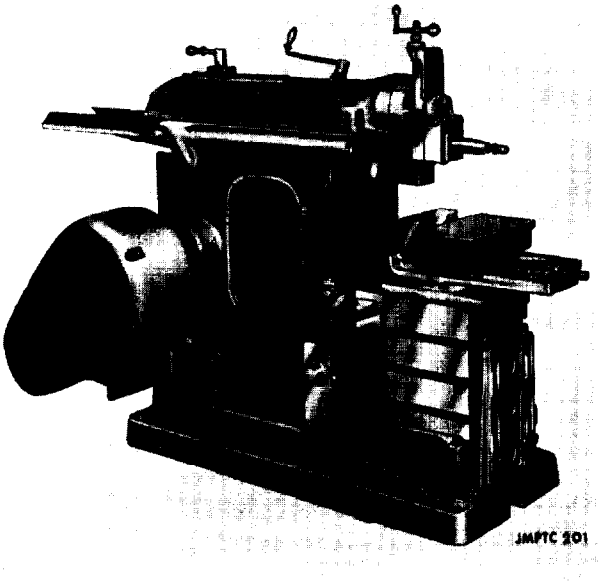

Figure 8-6. Example of item which prohibits top stacking.

f. Chart Reference 3—Is Material in Lightweight Domestic Container? In general, domestic containers designed for surface shipment by rail or other means are of adequate strength for export air shipment. Containers designed for domestic shipment are usually much lighter than conventional containers designed for export surface shipment. If little or no tare weight can be saved by using one of the preferred air containers, consideration should be given to using the domestic container, providing it is known that the container will be satisfactory for any reshipment from the port of embarkation. For example, domestic containers would not be satisfactory for Navy shipment consigned to a unit of the fleet, as final delivery may be made by transfer from supply ship to consignee while at sea, as illustrated in figure 8-8.

g. Chart Reference 4—Is Material in Unit or Intermediate Pack? In determining the answer to the question, the provisions of (1) through (3) below should be used as a guide.

(1) *Unit package.* The unit package is the first tie, wrap, or container applied to a single item or quantity thereof, or to a group of items of a single stock number, preserved or unpreserved, which constitutes a complete or identifiable package. Frequently used items, items issued in definite quantities, or sets of kits comprised of several companion parts are often packaged in a single container.

Figure 8-7. Item mounted on skid base fitted with light framework to permit stacking.

Figure 8-8. Delivery of supplies at sea.

(2) *Intermediate package.* The intermediate package is an interior container, bundle, or wrap which contains two or more unit packages of identical items.

(3) Unit or intermediate packs may be used as exterior containers if they meet the requirements for the levels of protection for packing as specified in Army Regulation 700-15/NAVSUPINST 4030.28B/AFR 71-6/MCO 4030.33B/DLAR 4145.7, Packaging of Materiels. Consideration will be given to the removal of heavy exterior containers when unit or intermediate packs are included in such containers, as shown in figure 8-9. When materials weigh less than 20 pounds, however, the instructions given in paragraph *m* below will be considered.

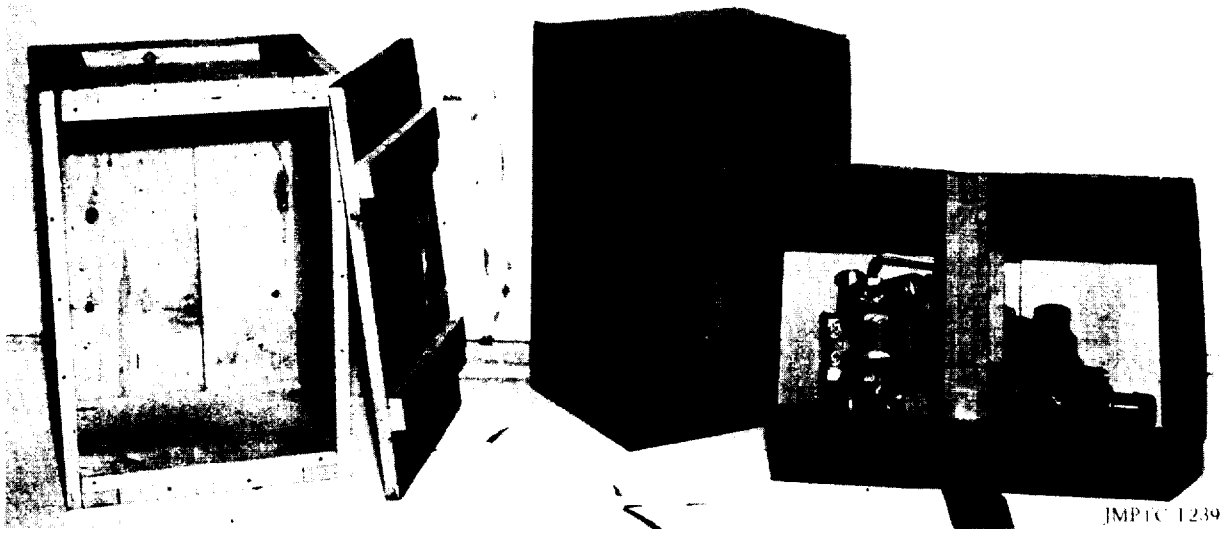

Figure 8-9. Repacking of gun drive assembly in lightweight container.

h. Chart Reference 5—Will Material Help Support all Faces of Container? Certain items of regular shape are sturdy enough to lend support to all six faces of the container, as shown in figure 8-10. Thus, the item or items are rugged enough, all other factors being equal, to withstand the hazards of transportation and the container serves merely to protect the surface or as a means of consolidating unit loads. Some items of regular shape may appear sturdy, but because of delicate internal mechanism, should be classified as fragile.

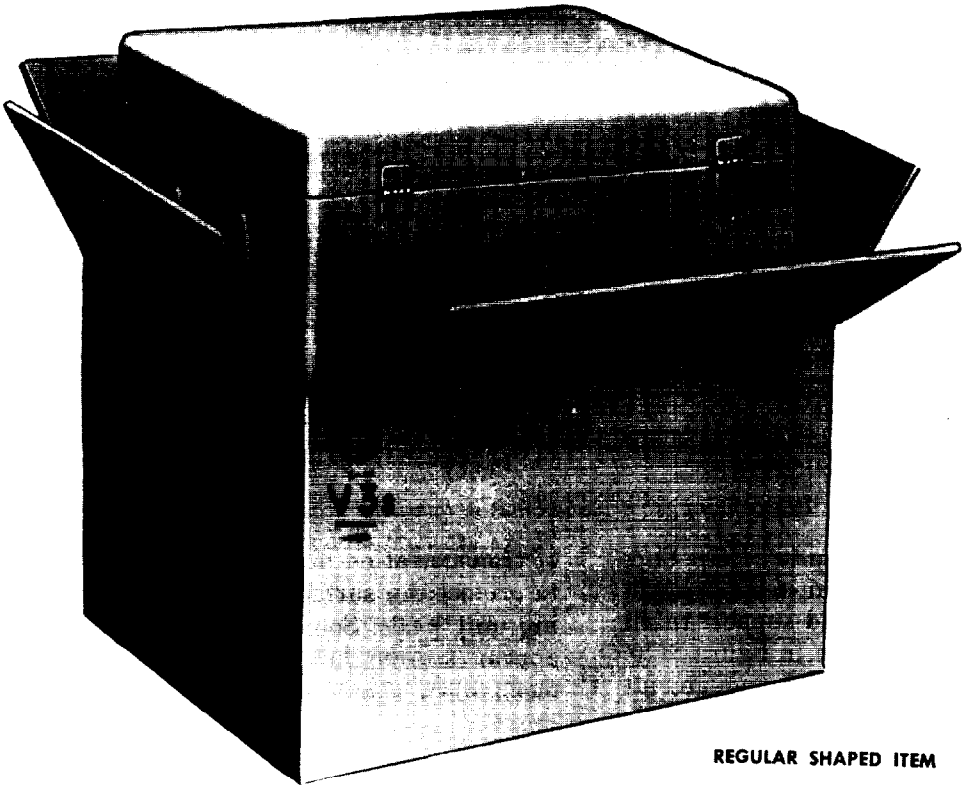

REGULAR SHAPED ITEM

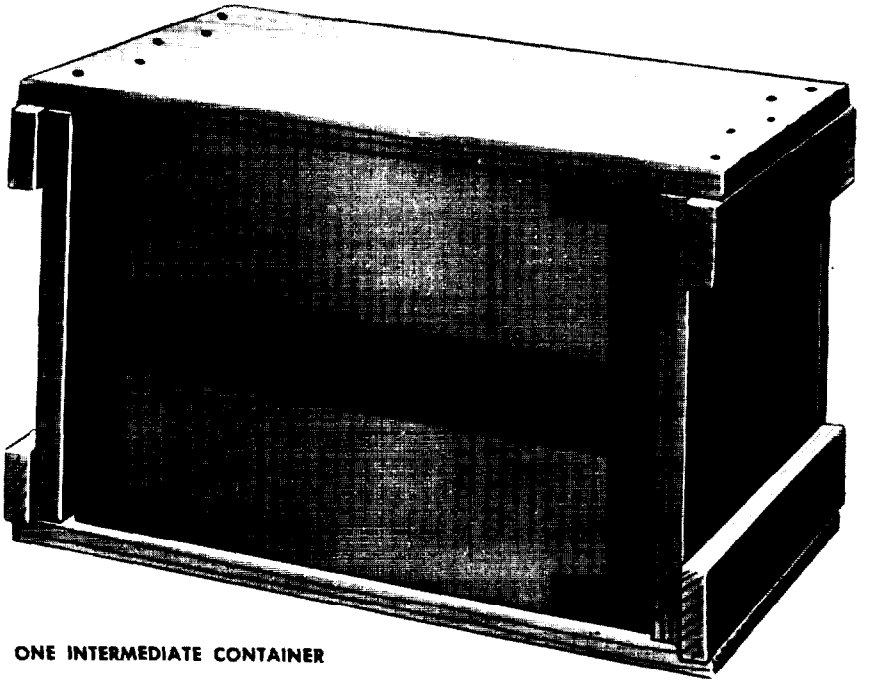

ONE INTERMEDIATE CONTAINER

JMPTC 403

Figure 8-10. Loads that lend support to all faces of the container.

i. Chart Reference 6—Container of Adequate Strength for Air Shipment? In determining the answer to the question, the provisions of (1) through (3) below should be followed.

(1) *Strength of containers.* The container must be strong enough to withstand preferred handling at air terminals, in-flight conditions including tie-down stresses aboard the aircraft, and transshipment from the port of debarkation necessary to reach the consignee. A container may be deemed adequate if it will withstand stacking to a height to 10 feet with similar containers bearing similar loads.

(2) *Surface common carrier requirements.* It may be necessary to ship material to the air terminal by surface transport; if so, the container must meet the requirements of the surface common carrier.

(3) *Heavy container.* In some instances, surface common carrier requirements may necessitate a heavier container than would be required for air shipment. Consideration will be given in designing and marking the shipment so the heavy exterior container or parts thereof can be removed for air shipment.

j. Chart Reference 7—Can Container be Reinforced and Retain its Light Weight? Containers may be reinforced in one or more of the following ways:

(1) *Nonmetallic strapping.* Nonmetallic strapping (Specification PPP-S-760) may be used for reinforcement or closure of domestic shipping containers, for securing of holding compressed material in bales, for securing multiple units on skids, or pallets, or for bundling together loose or packaged material. Nonmetallic and cord strapping should be used on materials that will be stored under cover or given inside storage illustrated in figure 8-11.

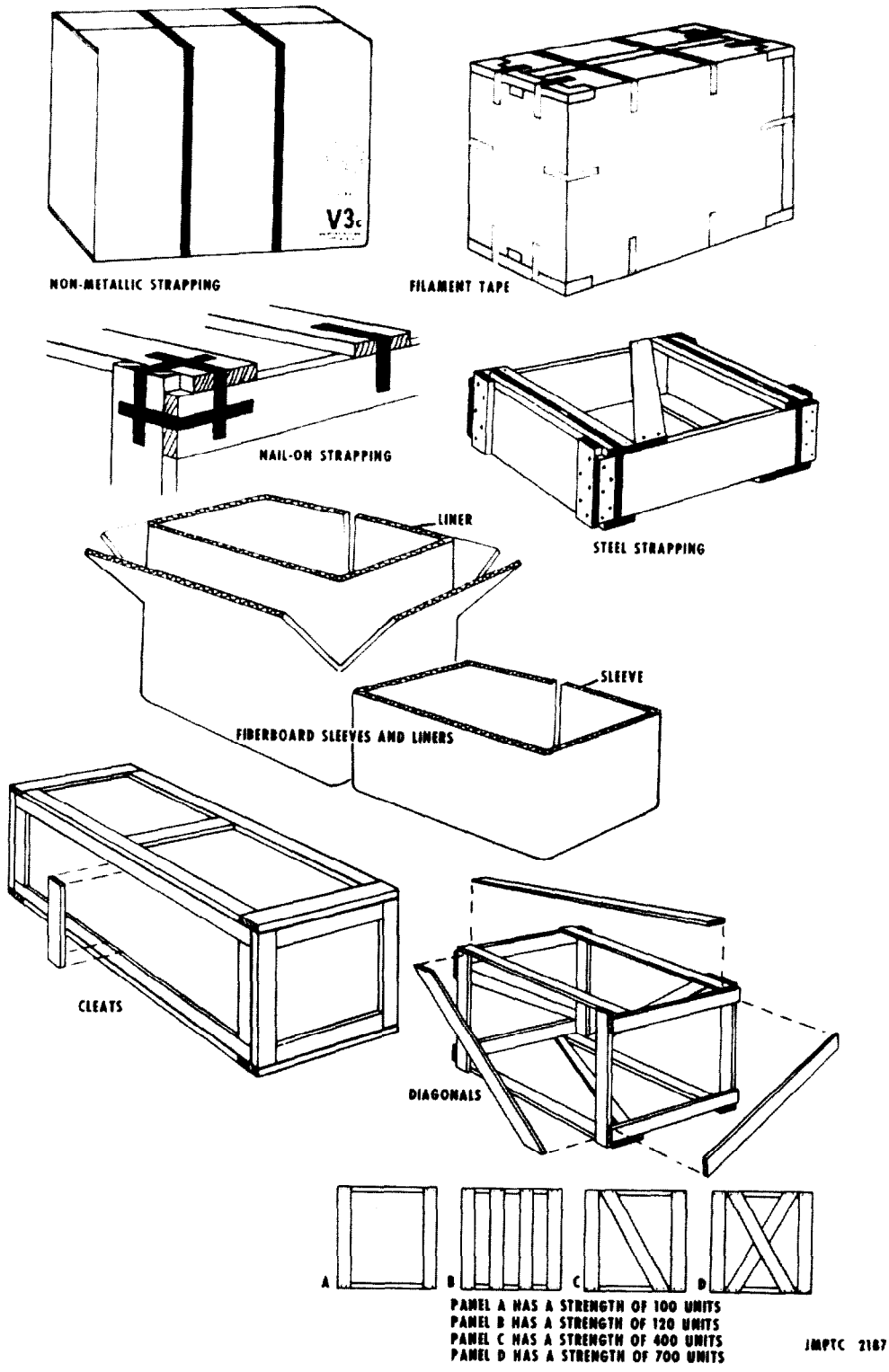

Figure 8-11. Methods of reinforcing containers.

(2) *Filament tape.* Filament tape (Specification PPP-T-97) may be used to reinforce fiberboard or fiberboard-surfaced containers, as shown in figure 8-11. Either pressure sensitive or gummed filament tape may be used. These tapes are used most effectively and economically in short strips 1 or 2

inches wide, applied across all seams and score lines and extending 3 to 5 inches across each face.

(3) *Steel strapping.* Steel strapping (Specification QQ-S-781), in figure 8-11, may be used on both wooden boxes and crates. When strapping over an irregular load or one that supports the container at a few definite points, the strapping is applied over the area where the container is supported. Failure to do so could crush the container.

(4) *Nail-on strapping.* Nail-on strapping, in figure 8-11, may be used to reinforce corners of crates or in like applications. This strapping is annealed, flat, prepunched or plain, and designed for nailing in place. This method of reinforcement may be used on corner constructions, to reinforce nailed ends of intermediate members, and for fastening members to bases.

(5) *Cleats.* Cleats, shown in figure 8-11, may be added as reinforcement to boxes. In such application, cleats not only serve to strengthen the container, but may also provide a supported surface for steel strapping. Intermediate cleats added as reinforcement should be the same size as the cleats already present and should fit snugly in place. Caution should be exercised in adding cleats to filled containers to prevent damage to the contents.

(6) *Diagonals.* Diagonals, shown in figure 8-11, may be used to reinforce crates and protective wooden frameworks. Diagonals add greater strength for less weight of material than intermediate members applied at right angles to outer members.

(7) *Fiberboard sleeves and liners.* Fiberboard sleeves may be used to protect the top, bottom, and ends of fiberboard boxes and to reinforce horizontal score lines. A sleeve should be made of the same grade of board as the box on which it is used and made of one piece. It should fit closely over the box. In some instances, a liner and pads may be used more advantageously. The means described above will generally provide container reinforcement without greatly increasing weight and should be utilized whenever possible. By making proper use of reinforcing materials, additional strength of container is provided and in most cases will allow the use of the lighter weight container.

k. Chart Reference 8—Can Material be Blocked, Braced, or Cushioned to Lend Support to Container? Many irregular-shaped items of rugged or semirugged nature can be converted to loads that lend support to the container by proper application of blocking, bracing, and cushioning (chap. 8). This may be accomplished in accordance with the following procedures:

(1) Converting nonsupporting loads to loads that support the container by use of fiberboard die cuts, by extra heavy cushioning all around, or by a framework of wood or plywood.

(2) Protecting sharp or fragile projections which cannot be removed by blocking or cushioning so that the container cannot be punctured and the shocks received will be transmitted to the more rugged parts of the item.

(3) Securing loose or free moving parts by tying, taping, wrapping, or other means.

(4) Disassembling to reduce cubic volume.

(5) Removing delicate or highly finished parts.

l. Chart Reference 9—Are Containers for Overseas Shipment Water-Resistant? Containers used for overseas shipment must have enough resistance to water to retain their structural entirety when exposed to the elements for limited periods of time. Therefore, the selection of the proper style and strength of container should be carefully considered to ensure the commodity against the hazards of handling and transportation. Since it may be difficult to decide the proper style and strength necessary, it is suggested that the packers refer to the specification or the packaging publications to ascertain that he is using the correct container. As an example, the use of Class-Weather-resistant fiberboard boxes in lieu of using Class-Domestic fiberboard boxes for shipment of military material overseas.

m. Chart Reference 10—Will Material Weigh Less than 20 Pounds? Many irregularly shaped items weighing less than 20 pounds, which would be difficult to block, brace, or cushion by normal means, may be shipped in lightweight containers by using extra amounts of cushioning. The cushioning will compensate for the lighter and less rigid container and usually results in lower tare weight. Material weighing less than 20 pounds, including the material packed in unit packages, may be easier to handle if several items are consolidated in other lightweight containers.

n. Chart Reference 11—Can Container Be Made Water-Resistant? Generally, domestic fiberboard and paperboard are the only container materials the strength of which would be lowered by exposure to water. Containers fabricated of these materials can often be made water-resistant by using waterproof overwraps.

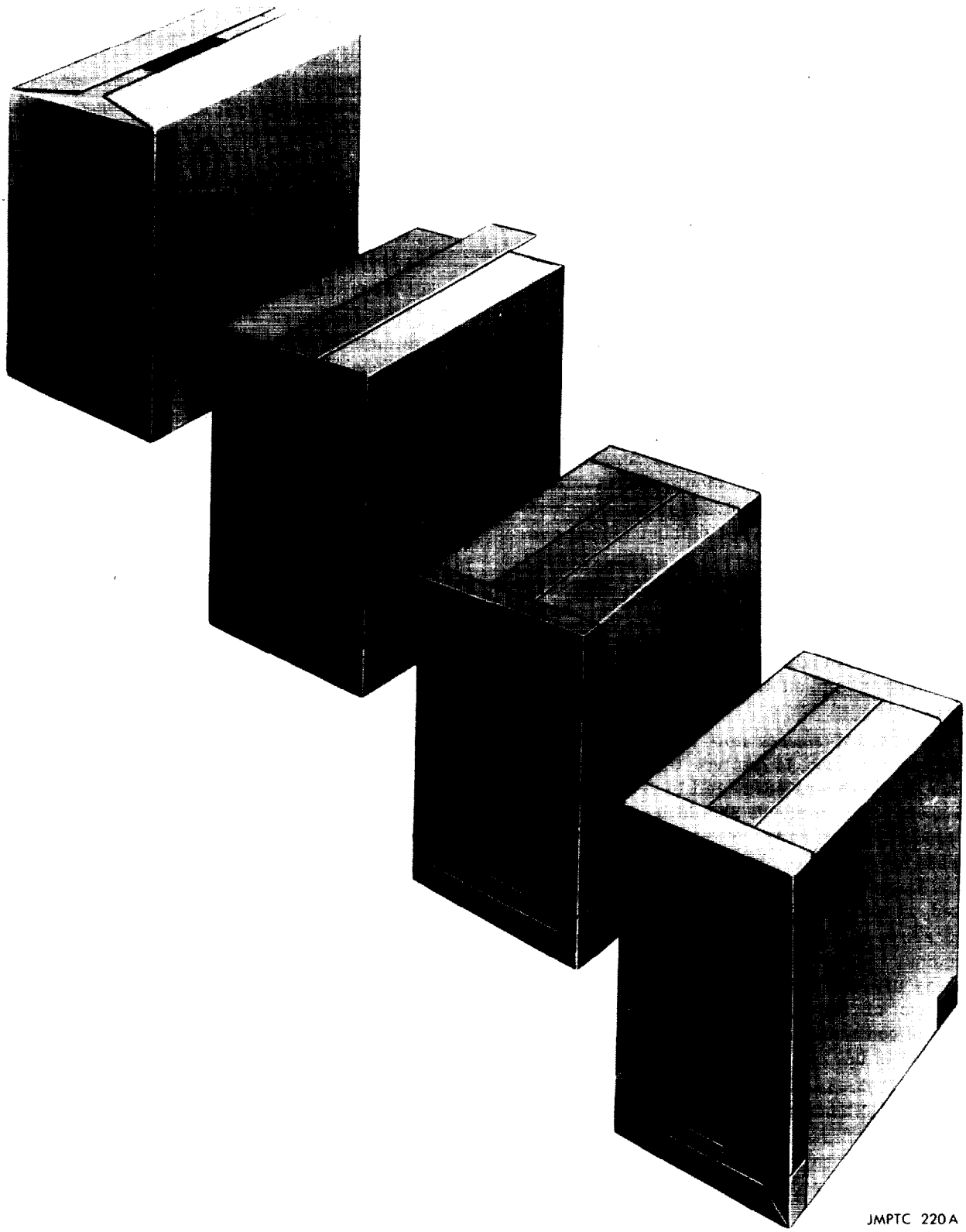

Figure 8-12. Waterproofing containers.

8-4. Selecting the Lightest Suitable Container

When, after following the flow of the chart through the various questions and references, it is necessary to choose the lightest suitable container in a given weight group, such choice must be followed by a consideration of blocking, bracing, or cushioning according to reference 8. Note that the chart uses the word "suitable" as opposed to "possible," thus precluding the packing of material in any one of the containers in a given group. Observe the reduction in tare weight and cube resulting from the selection of fiberboard in lieu of nailed wood boxes having the same inside dimensions, as illustrated in figure 8-13. In general, items weighing under 40 pounds will require no greater protection than that afforded by a fiberboard box. It is suggested that the gross weight of any shipping container should not exceed 150 pounds, unless the weight of the individual item being packed is heavier. The limitation of 150 pounds is specified to facilitate handling in storage, during transportation, and in the field. Make use of tables 8-1, 8-2, and 8-3 in selecting an interior, exterior, or special container based upon weight and size limitation, if the container selected is not found in the Container Selection Chart. Additional information on the uses and limitations of containers to be used for air shipment will be found in chapter 4 and table 8-1.

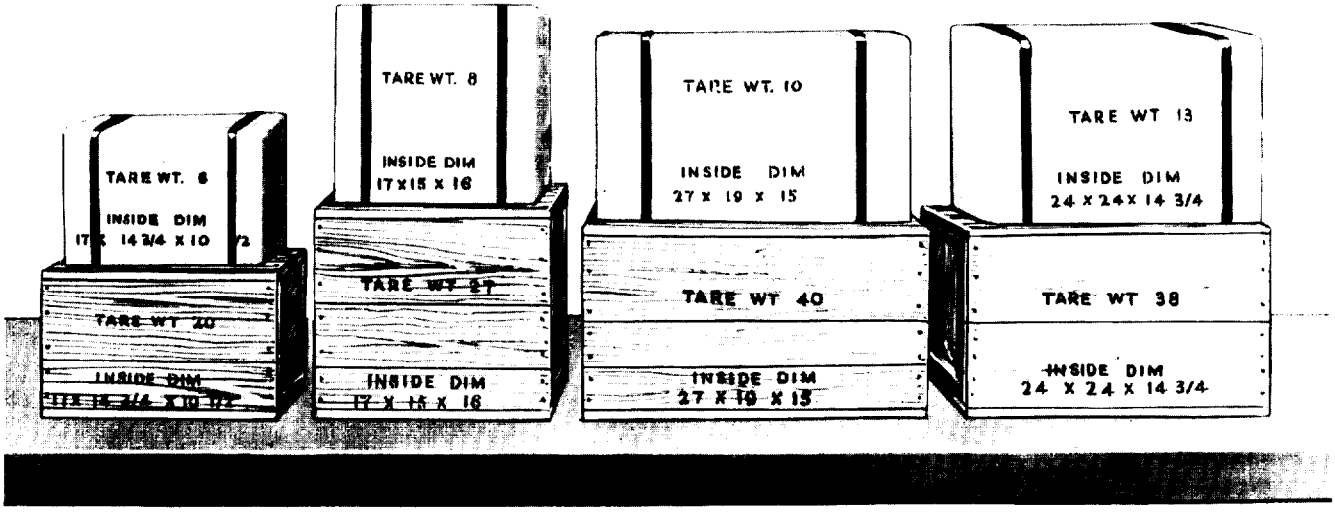

JMPTC 442

Figure 8-13. Weight and cube reduction through proper container selection.

8-5. Shipping Container and Packing Instructions

Shipping container and packing instructions have been prepared for fuel tanks, elevators, ailerons, rudders, stabilizers, and other components. The containers often include an open crate for air shipment and a reusable, sheathed crate for surface shipment. The sheathed crate houses the open crate during surface movement but is removed for air shipment. In other instances, only the open

crate for air shipment has been designed. The instructions contain drawings and photographs and include a list of materials required to build the containers and the procedure to follow during packing, assembly, and marking. These "Shipping Container and Packing Instructions" shall be used for the packing of any aircraft component for which they have been written.

8-6. Consolidation

For ease of handling, multiple shipments of containers less than 10 inches in height should be consolidated in fiberboard boxes, pallet boxes, or other lightweight containers. Multiple shipments of containers over 10 inches in height should be consolidated when practical by palletizing, strapping together, or by the use of pallet boxes. The packer will choose the lightest method of consolidation possible.

NOTE

Item received in metal containers sealed to form method IA or method II (specification MIL-P-116) packs should not be removed from these containers for repacking. Do not tamper with the seal of such packs. This note will also apply to items in "Performance Oriented Packaging" (POP) containers. If opening of POP packaging is necessary, it shall be done in a manner as not to effect the packaging or contents of the pack and, also, re-closing and sealing in the same manner as before it was opened must be accomplished. If opening and closing of the POP container can not be done in the manner described, then, the UN certification will be voided.

In an effort to reduce weight and cube, and to consolidate small packages as much as possible, certain containers have been engineered to meet special applications in the preparation of cargo for air shipment, as addressed in chapter 5.

CHAPTER 9

BLOCKING, BRACING, CUSHIONING, AND ANCHORING

9-1. Necessity for Blocking, Bracing, Cushioning, and Anchoring

Each military service has the responsibility for packaging numerous items and pieces of equipment. This materiel will differ in size, weight, shape, fragility, and composition. During the packaging and packing phase, consideration must be given to specific characteristics of each item. The procedures and recommendations outlined and illustrated in this chapter will form a practical basis for application of the numerous principles involved in effective packing. This information should be interpreted and applied with sound judgement to ensure protection to items and equipment against the hazards encountered by handling, loading, storage, and transportation.

9-2. Hazards of Airlift Transportation

a. There are many hazards associated with the air lifting of cargo with which the shipper and carrier are concerned. These hazards, however, may not be detrimental to cargo if proper measures to prevent problems are employed. Some of the hazards directly associated with flight are as follows:

(1) *Acceleration/deceleration*—The fore and aft pressures, also landing forces, which are exerted on cargo. Proper packaging is necessary to prevent damage to cargo.

(2) *Turbulence*—rough or "bumpy" flight conditions impose shock-forces upon cargo. Again, proper packaging is essential to prevent damage.

(3) *Altitude*—increased altitude decreases atmospheric pressure which in turn causes pressurized cargo and compartments to increase its internal pressure. Leakage from packages containing liquid materials, some of which may be hazardous, could result from improper packaging.

(4) *Temperature*—extremes such as freezing to very hot may be a problem when aircraft is parked with its cargo for long periods of time. Aircraft cargo compartments, however, usually have a range of temperature from 30 to 70 degrees F (minus 1 to 21 degrees C). Nevertheless, in some instances, damage may ensue from improper packaging.

(5) *Cargo Restraint*—air freighters are normally well equipped for restraining cargo during flight. The human element involved in loading and restraining cargo is paramount to preventing damage or a mishap in flight.

b. There are other hazards involved in airlift cargo operations, other than when cargo is in flight. For instance, there are potential risks of theft, pilferage, handling damage, and certain environment hazards such as outdoor storage. The larger, modern terminal is generally equipped with mechanized systems to move cargo safely through its facility; however, some smaller, nonmodern terminals still handle cargo manually—thereby, increasing the risk of handling damage. Storage facilities capable of separating high value items from other cargo protecting perishables from deterioration have the advantage over other terminals that require outdoor storage of their cargo. Outdoor storage, of course, increases the likelihood of water and element damage. Security is another risk factor to be considered. Security-conscious carriers will provide protective measures to prevent theft and pilferage.

c. There are, still, other hazards involved in transporting cargo by truck and rail which could be discussed, however with the use of ISO containers, MILVANS, and other air cargo containers, exposure of cargo to weather, theft, pilferage, and handling damage is minimized. Highway highjacking or grand larceny can not be ruled out as a hazard. The consolidation of air cargo by use of air cargo containers is greatly encouraged by airlines through lower tariffs and rates.

d. One other important aspect of avoiding the hazards of loss and damage during airlift transportation is that of proper packaging. Regarding shipping "hazardous materials" or "dangerous goods", the shipper, freight forwarder, and carrier must comply with the provisions of the ICAO regulations and the 49CFR mentioned preivously.

9-3. Blocking, Bracing, Cushioning, and Anchoring

To understand how blocking, bracing, cushioning, and anchoring protect items and materials, a knowledge of their meaning is necessary.

a. Blocking. Blocking is a method of interior packaging which builds up irregular-shaped articles to make them regular in shape in order to protect projections from damage and to reinforce weak parts. Materials used in packing and loading maintain objects in a fixed position during transit by bracing them against each other or against the

sides of the container with blocks, wood strips, steel straps, etc., (*b* below).

b. Bracing. Bracing is the process of supporting units within a package to prevent damage through movement and/or distribute the weight on all faces of the container (interior bracing). Examples of materials used in bracing are wood, corrugated and solid fiberboard, plywood, and metal.

c. Cushioning. Cushioning is the protection from physical damage afforded to an item by placing about its outer surface materials that have been designed to absorb the shock or reaction caused by external forces. Cushioning materials, when used properly, will absorb the energy of shocks and vibration through a gradual but increasing resistance to the movement of the item. The energy from shocks and impacts is absorbed when the cushioning material is compressed. This results in a damping or minimizing of the force to the item.

d. Anchoring. Anchoring is the process of securing an item to the base of a shipping container by means of bolts, tie rods, tiedown timbers, or steel strapping to prevent movement.

e. Functions of Blocking, Bracing, Cushioning, and Anchoring. The functions of blocking, bracing, cushioning, and anchoring are interrelated. In general, blocking, bracing, and anchoring are used to immobilize items within container as opposed to the use of cushioning for controlling the movement of the item within the container. The functions of cushioning, blocking, bracing, and anchoring are discussed in paragraphs (1) and (2) below.

(1) *Functions of blocking and bracing.* Blocking and bracing are used to secure items or components so that they will not shift within a container, to make irregular-shaped items fit a regular container, to distribute the weight of irregular items over all edges and faces of the container, to protect projections from injury, to prevent projections from damaging the barrier of container, to provide space for spare parts or make room for desiccant, and to reinforce weak portions or mountings. Blocking and bracing modify the original shape of an item so that it is protected adequately and so that it fits the container. The materials used for this purpose differ from cushioning in that they are intended to transmit shocks. The blocks and braces should be applied against portions of the container that are strong enough to resist forces tending to distort them. Likewise, the bracing should be arranged to distribute forces to several reinforced sections of the surface of the item.

(2) *Functions of cushioning.* The following statements summarize the functions of cushioning materials.

(*a*) To protect delicate and fragile items against the effects of shock and vibration hazards encountered in handling and transportation.

(*b*) To protect delicate and highly polished surfaces against abrasion.

(*c*) To prevent rupture or severe abrasion to greaseproof or waterproof barriers at points of contact with solid wood blocks or bracing materials.

(*d*) To protect small projections on items.

(*e*) To absorb liquids which might leak from broken seals or glass containers.

(*f*) To protect moisture-vaporproof barriers at points of contact from sharp edges of the item itself, packing materials, or containers.

(*g*) To protect strippable compound coatings, when applied to large or heavy items, at point of contact with wood blocking.

f. Results of Improper Blocking, Bracing, Cushioning, and Anchoring. Blocking, bracing, and anchoring that are poorly designed and fastened will not stand the hazards associated with handling and transportation. The blocking may become loose and displace the item, rupture the barrier materials and container; therefore, permitting damage to the contents. Items that are improperly cushioned may be broken, rupture the barrier or container, and render the item useless. When shipment damage or packaging deficiencies are noted, SF 364, Report of Discrepancy (ROD) is to be prepared.

g. Damage Control. Properly designed blocking, bracing, or cushioning will withstand rough handling (repeated drops, impacts and vibration) encountered by all modes of transportation, and will maintain packaged or packed items in a serviceable condition. All items, when packed, should be able to withstand the most severe shipping conditions that reasonably may be anticipated. Included in this chapter are characteristics of materials, methods of application, and illustrations of acceptable methods of blocking, bracing, cushioning, and anchoring items in interior and exterior shipping containers.

NOTE

In describing and illustrating the various methods of blocking, bracing, cushioning, and anchoring of items, no attempt has been made to determine the method of preservation that should be applied.

9-4. Physical Characteristics of the Item

In planning to block, brace, or cushion an item in a shipping container, the nature and physical characteristics of the item must be evaluated. All items, medium or large in size and weight, whether susceptible to shock damage or not, should be blocked or braced to prevent damage to the item and/or container. An item any size or weight that is subject to shock damage must be cushioned. For some items, it may be necessary to provide a combination of blocking or bracing from damaging the surface of the item. To assist in determining whether an item has to be blocked, braced, or cushioned, the following factors have to be carefully considered: shock resistance (or fragility), shape of the item, its size, weight, lack or availability of mounting provisions, degree of disassembly permissible or feasible, and the type of load the item represents, as shown in figure 9-1.

a. Shock Resistance. Shock resistance may be defined as the ability of an item to withstand impact without damage, and is the primary factor in determining whether an item is regarded as rugged, semifragile, or fragile. Some items have a low-shock resistance merely because of one fragile component. The feasibility of removing and packing separately the fragile components of an otherwise rugged item should be considered. However, before disassembly of any item for the purpose of packing, proper authorization should be obtained.

(1) *Rugged items.* Items are considered rugged if they can withstand impact without damage, provided that accessible loose parts are secured to prevent movement. In general, cushioning is used with rugged items only to prevent abrasion. When items are light and small, cushioning may suffice to block and brace the item into position.

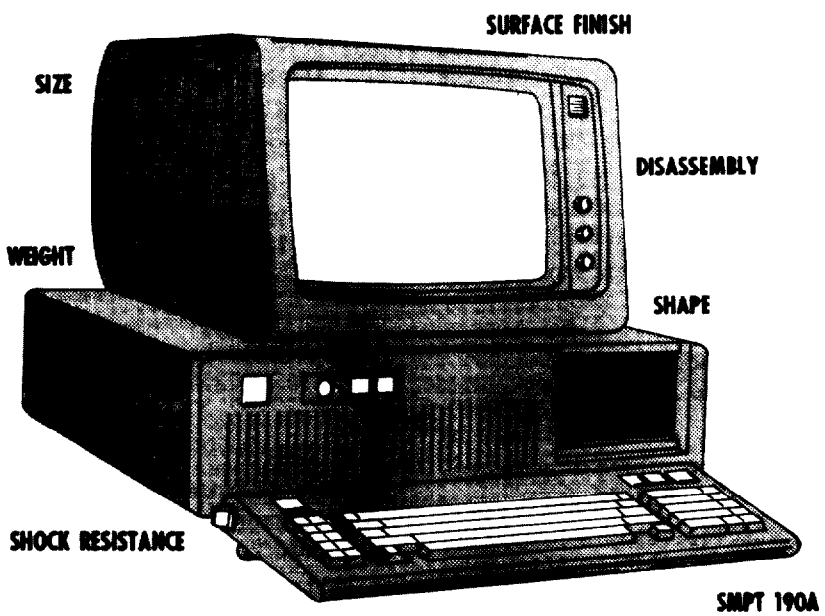

Figure 9-1. Item characteristics which determine the selection of blocking, bracing, or cushioning.

(2) *Semifragile items.* Items are classed as semifragile if they can withstand a limited amount of impact without damage. Unlike rugged items, they cannot be depended upon to assist the container in resisting distorting forces.

(*a*) At least 2-inch clearance should be allowed between the item and the faces of the container.

(*b*) Cushioning will be used for packaging of semifragile items to prevent surface abrasion and to absorb part of the impact.

(3) *Fragile items.* Items are classed as fragile if they can withstand very little impact without damage.

(*a*) If an item is fragile, the interior pack must be designed to provide sufficient cushioning to absorb the shock to which the pack may be subjected.

(*b*) When fragile components cannot be removed for packaging separately, it is necessary to treat the entire item as if it were as fragile as its most fragile component.

(*c*) Fragile items should not be fastened to, or come in contact with, any face of the shipping container.

(*d*) They may be blocked and braced to one or more faces of an interior container which in turn is floated by cushioning in the shipping container.

b. Shape. The shape of the item is an important factor in planning the pack. Regular-shaped items will ordinarily fit snugly in a container with a minimum of blocking.

(1) Regular-shaped items require little or no blocking in the container, whereas an irregular-shaped item may require an elaborate system of blocks and braces before being secured in place. Regular-shaped items consist of cubes and rectangular or cylindrical solids having no projections or depressions. Each face of these will fully contact the inner face of a snugly fitted container.

(2) Curved surfaces will require carefully fitted blocking and bracing to prevent damage to the item and to distribute the internal pressures more evenly to the faces of the container.

(3) Long, slender items, especially if heavy, develop considerable end thrust when subjected to impact and must be blocked to prevent endwise movement.

c. Size and Weight. The manner in which the weight of an item is supported within a container has a great influence on the ability of the container to retain and protect the item. Containers are most rigid at or near the corners and least rigid at the unsupported spans or center areas. When the weight of the item is supported at the corners or close to them, more rigidity is obtained and the container is able to withstand the forces exerted by the contents.

(1) *Size.* A large item does not necessarily require more extensive or stronger blocking or larger amounts of cushioning than a smaller item by virtue of its size alone.

(*a*) The large container needed by the larger item may require more extensive and stronger blocking to bridge the wider spans between the container faces or frame members.

(*b*) By the same token, a large item may require that the cushioning be distributed over larger areas than a smaller one.

(2) *Weight.* Since the impact force developed by the sudden stop of a moving object is directly proportional to its weight, the weight of an item is a very important factor in blocking, bracing, cushioning, and anchoring. Where weights are concentrated upon small areas, it is often necessary to distribute the weight over large areas, or to transmit part of the weight from one container face to the edges of corners of the container.

d. Lack of Availability of Mounting Provisions. Frequently, it is possible to secure an item within the container in the same manner as is done when the item is in use. When the item does not have adequate mounting facilities, one of the following methods may be used to secure it in place:

(1) It may be strapped to a mounting board and the mounting board bolted to the base of the container.

(2) If it is heavy, it may be suspended in a metal, wood, or combination wood and plywood frame, which is bolted to the base.

(3) For heavier items with irregular lower surfaces, the blocking may be built as an integral part of the base of the container to permit the item to be lowered onto the blocking and fastened in place.

e. Degree of Disassembly Permissible. It is advisable to examine the possibilities of disassembling an item prior to planning the pack, especially if the item has one or more projecting parts.

(1) Disassembly may simplify blocking and bracing requirements, reduce the size of the container, or simplify preservation of the various parts.

(2) Before disassembling any complicated or delicately adjusted piece of equipment, competent advice should be sought as to the ease of reassembly without undue difficulties or the use of special tools.

f. Types of Loads. The term "type of load" refers to the contents of a container and their ability to add strength or cause damage to the faces of the

container, as a result of internal and external forces developed during transit.

(1) Blocking, bracing, and anchoring are sometimes used in connection with type 2 (average) loads.

(2) In the case of type 3 (difficult) loads, however, it is almost an unavoidable operation due to the irregular shape, fragility, heaviness, or high density of the items which make up such loads.

g. Preservation of Item. Prior to blocking, bracing, cushioning, or anchoring an item, a thorough study should be made as to whether the item or component parts require preservation. See paragraph 1-5 of Introduction.

h. Preparation of item.

(1) *Disassembly of item.* The possibility of disassembling an item to reduce the size of the container, to simplify packing, or to permit the use of more economical materials should be investigated throughly. To facilitate reassembly, bolts, screws, pins, brackets, and other miscellaneous hardware removed from the item should be secured to the part from which it was removed or otherwise packaged separately and clearly identified (MIL-STD-129).

NOTE

Proper authorization should be obtained before disassembling any item prior to packaging.

(2) Nondetachable weak or moving parts. Nondetachable parts of an item that are too weak to withstand the hazards associated with handling and transportation should be reinforced prior to packing. Rotating, sliding, loose, or springmounted components that are not secured against movement should be secured.

9-5. Cushioning Materials

a. Characteristics of Cushioning Materials. Packaging personnel should have a general knowledge of the characteristics of cushioning materials in order to use them effectively. Cushioning materials behave differently under similar conditions based upon the characteristics of the material. The chemical and physical characteristics of cushioning material will have a bearing on the type of cushioning required for a given item. Some of the most common characteristics that affect cushioning materials are: compression set, resiliency, rate of recovery, dusting, corrosiveness, fungus resistance, creep, reaction to temperature changes, and dusting.

b. Common Cushioning Materials. DLAM 4145.2, Vol II/TM 38-230-2/NAVSUP PUB 503, Vol II/AFP 71-16/MCO P4030.21 contains detailed requirements on characteristics of cushioning materials used in military packaging.

9-6. Application of Blocking and Bracing Materials

Materials utilized for blocking and bracing are wood, plywood, fiberboard, molded pulp form, metal brackets or frames, metal strapping, low density fibrous materials, nails, bolts, and barrier materials. These materials should be applied to items which do not completely fill the shipping container. They will be applied as blocks, braces, anchors, or by other means to completely immobilize the item within the container. Items with movable parts or items mounted on springs or other flexible supports should be braced securely to prevent movement, except where such mounting is part of the package cushioning or is designed to protect against shock and virbration during shipment. The materials selected for all blocking and bracing and the design and application of the blocking and bracing should be compatible with the load to be supported and the size, shape, and strength of bearing areas of the item. The following materials are commonly used:

a. Polyurethane Foam, Rigid or Flexible, for Packaging.

(1) Polyurethane foam is used for cushioning, blocking, and bracing of items in various packaging operations.

(2) Flexible or rigid polyurethane foam is purchasable in performed pads or rolls and will comply with specification MIL-P-26514, "Polyurethane Foam, Rigid or Flexible, for Packing."

(3) When polyurethane foam needs to be made at the worksite, or workplace, it is done so by mechanically mixing two liquid chemicals called: component A (an isocyanate) and component B (a polyol resin). During the mixing process exothermic heat is produced and causes foam cells to rise many times its original size of the liquid volume.

(4) For FIP methods and procedures consult MIL-STD-1191, for equipment or systems consult MIL-F-87075B, and for FIP chemical requirements consult MIL-F-83671.

b. Corrugated Fiberboard. Corrugated fiberboard utilized for blocking and bracing should conform to PPP-F-320. Double-faced corrugated fiberboard, in the form of accordion-folded pads, flat pads, cells, trays, and liners, may be used to provide support around an item or other parts of the package. Pieces may also be specially die-cut to fit the item. The purpose of these supporting pieces is to distribute superimposed loads to support and cushion

the item. Whenever possible, blocking and bracing forms should be loaded in the direction parallel to the flutes, in order to obtain maximum strength qualities of the material. When designing blocking and bracing materials, such as cutting, slotting, scoring, and folding, proper fitting and distribution is of utmost importance. An explanation of the maximum loads applied to different configurations of these materials is included in this chapter.

c. Open-End Cells and Trays. Open-end cells and trays shown in figure 9-2 should be used for blocking and bracing deep recesses, bridging long projections, providing space for accessories or disassembled parts and desiccant, and providing clearance between the item and the container. Cells and trays should be fastened into shape with tape or staples. The surface of a cell or tray that is perpendicular to the contacting surface of the item is called the bracing support, which is considered as the load-bearing member. Bracing supports should bear directly on the item. When trays are used they should be scored and folded parallel to the flute direction and not exceed 4 inches in height. The allowable load for bracing supports is based on the unit strength and bursting strength or density of the fibrous material.

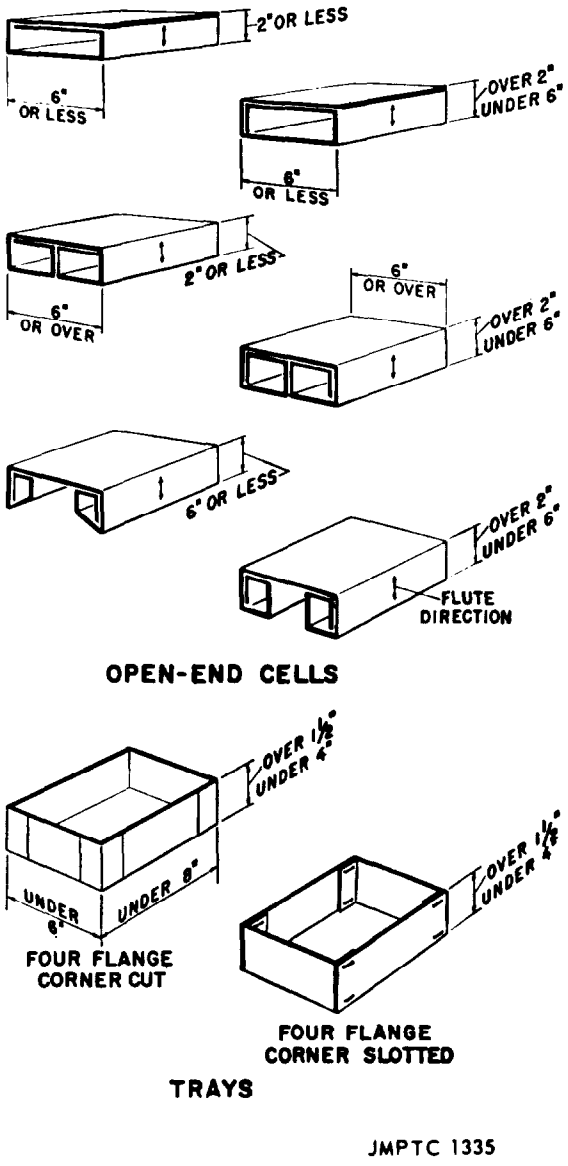

Figure 9-2. Open-end cells and trays.

d. Folded Pads. Folded pads have greater resistance to breakdown than open-end cells because the load is distributed over a larger area rather than on bracing support shown in figures 9-3 and 9-4. Corrugated fiberboard corner pads consist of multiple layers of fiberboard as illustrated in figure 9-4. They are used to provide the required clearance and support to rectangular-shaped items and for supporting an inner container in which items are packed.

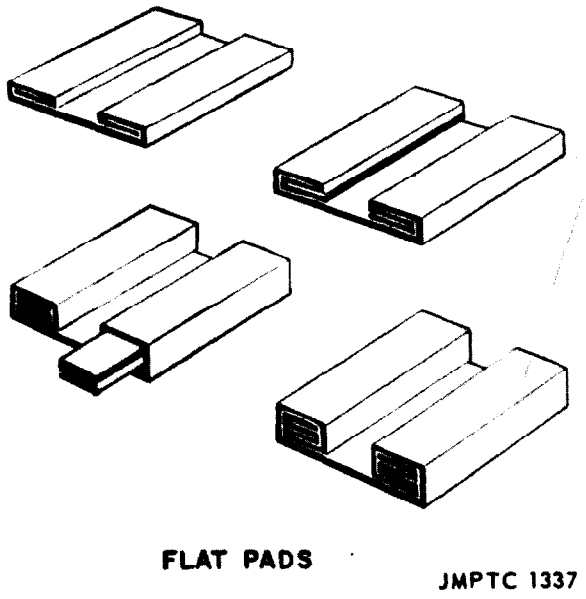

Figure 9-3. Corrugated fiberboard accordion-folded flat pads.

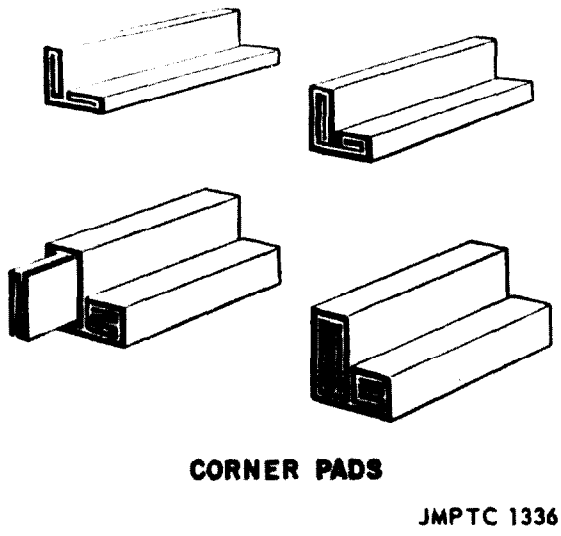

Figure 9-4. Multiple-layer corrugated fiberboard corner pads.

e. Corrugated Fiberboard Support Columns. Tubular or accordion-folded supports of corrugated fiberboard have a good application as corner column supports, increasing the stacking strength of the box while providing side-to-side and end-to-end padding at the same time. Support columns should be used as blocking when items are mounted on an auxiliary base and are packed in fiberboard boxes. The bottom of the support column should contact the top of the auxiliary base. The top of the support column should contact the inside surface of the top of the container. The flutes should be oriented in the top-to-bottom direction of the column. For maximum column strength, all creases should be made in the same direction as the corrugations. Folded pads are used for blocking greater loads than are feasible to support with cells and trays. Solid construction of folded pads distributes the load to the surfaces of the container in a more equalized manner. The flat pads should be designed to fit against a flat surface and the corner pads along the edge. The connecting webs between the flat pads should always come in contact with the container and not the item. All creases for folded pads should be made parallel with the corrugations. All scores and folds should be made at right angles to the flute direction. The minimum width for accordion-folded pads is 2 inches. Pads should be secured with tape in order for them to retain their shape. The load-bearing capacity of a pad is based on the ability of the corrugations to resist crushing. Increasing the number of pleats does not increase the safe load limit, numerous pleats increase cushioning values only.

NOTE

Wide or long items are better supported by several accordion-folded pads, placed side by side, than by one pad having extremely wide folded pleats.

f. Flat Corrugated Fiberboard Pads. Flat pads shown in figure 9-3 of corrugated fiberboard may be used to block very shallow projections, such as hinges or slight offsets on surfaces, to level off projecting screwheads, to fill in the space between the ends of inner flaps of regular-slotted style fiberboard boxes that do not meet; thereby, increasing the load-bearing area of the top and bottom. They are also used to separate items within a container when four or more items required interlocking partitions.

g. Corrugated Fiberboard Corner Posts. Fiberboard corner posts are used to reinforce the shipping container and to provide blocking for platform-mounted equipment. The flutes should be oriented in a vertical direction. The bottom end of the corner post should bear uniformly on the platform, and the top end of the corner post should bear on the inner flap of the fiberboard container or top member of other containers.

h. Corrugated Fiberboard Liners. A liner is a continuous pad, creased to contact two or more adjoining inner faces of a container. Liners are used under the following conditions:

(1) When an irregular-shaped item is placed within a fiberboard container, as illustrated in figure 9-5, and the item or interior packing does not adequately support the container, or when a container needs additional reinforcement against crushing.

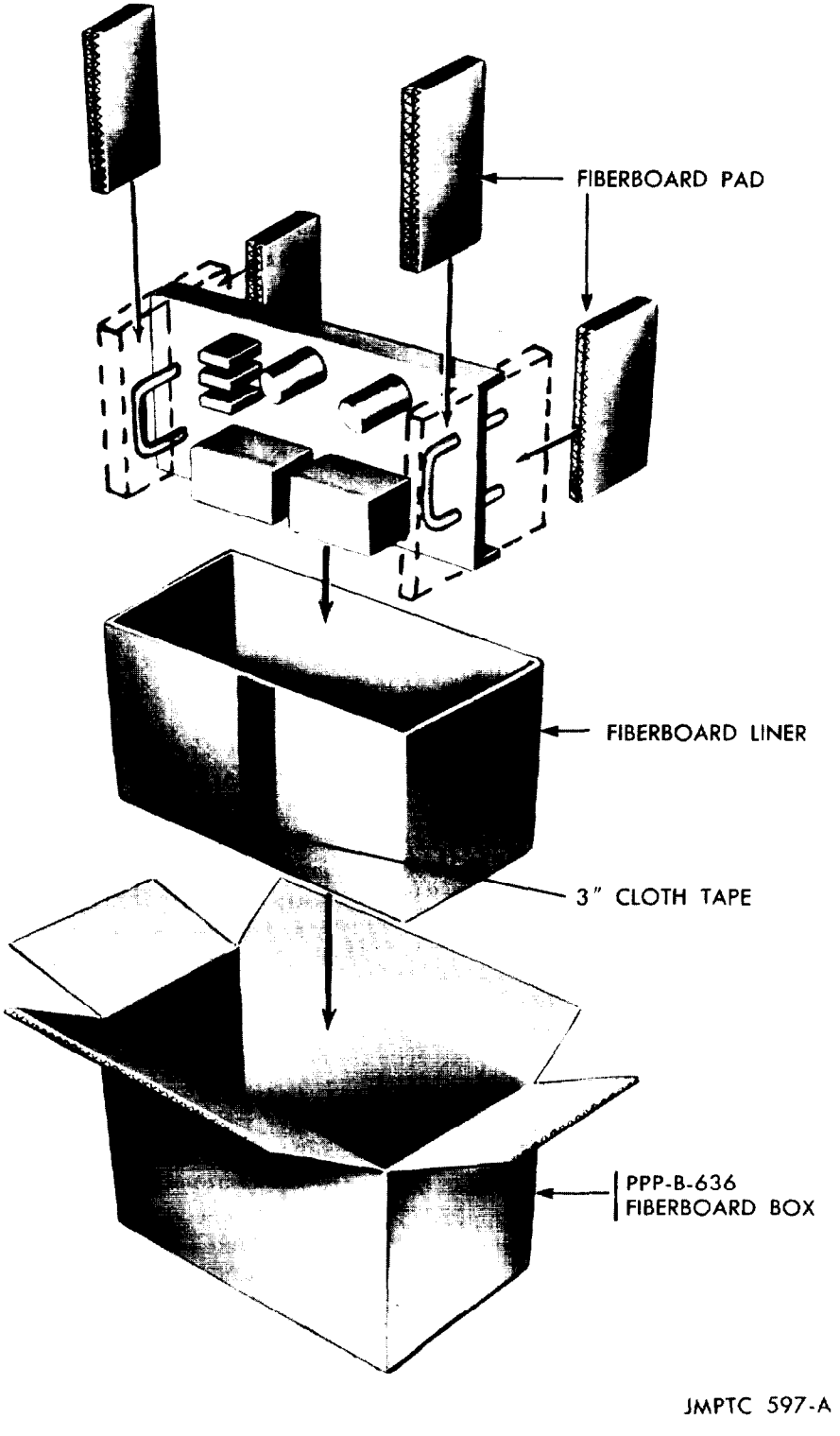

Figure 9-5. Use of liner to reinforce container.

(2) A liner should be used in lieu of two or more adjoining flat pads against the inner faces of a container.

i. Other Methods of Cushioning and Blocking. The preceding paragraphs cover only a few of the applications of corrugated and fibrous materials. Actually, their uses are unlimited and only a few can be covered in this chapter. However, their importance in conjunction with packaging military items and equipment for airlift is significant and their increased use is encouraged due to the lighter weight and lower cost compared to lumber or plywood, which has traditionally been used extensively for blocking and bracing. Figure 9-6 illustrates other applications of these materials based upon the fragility of the item. There are other low density materials, such as molded wood pulp, industrial cane fiberboard conforming to specification MIL-F-26862, and rigid forms of cellular plastics conforming to specifications PPP-C-1752, MIL-P-19644, MIL-P-40619 or MIL-P-21929. These materials may be cut, foamed-in-place, molded or otherwise formed as required and used for blocking and bracing applications.

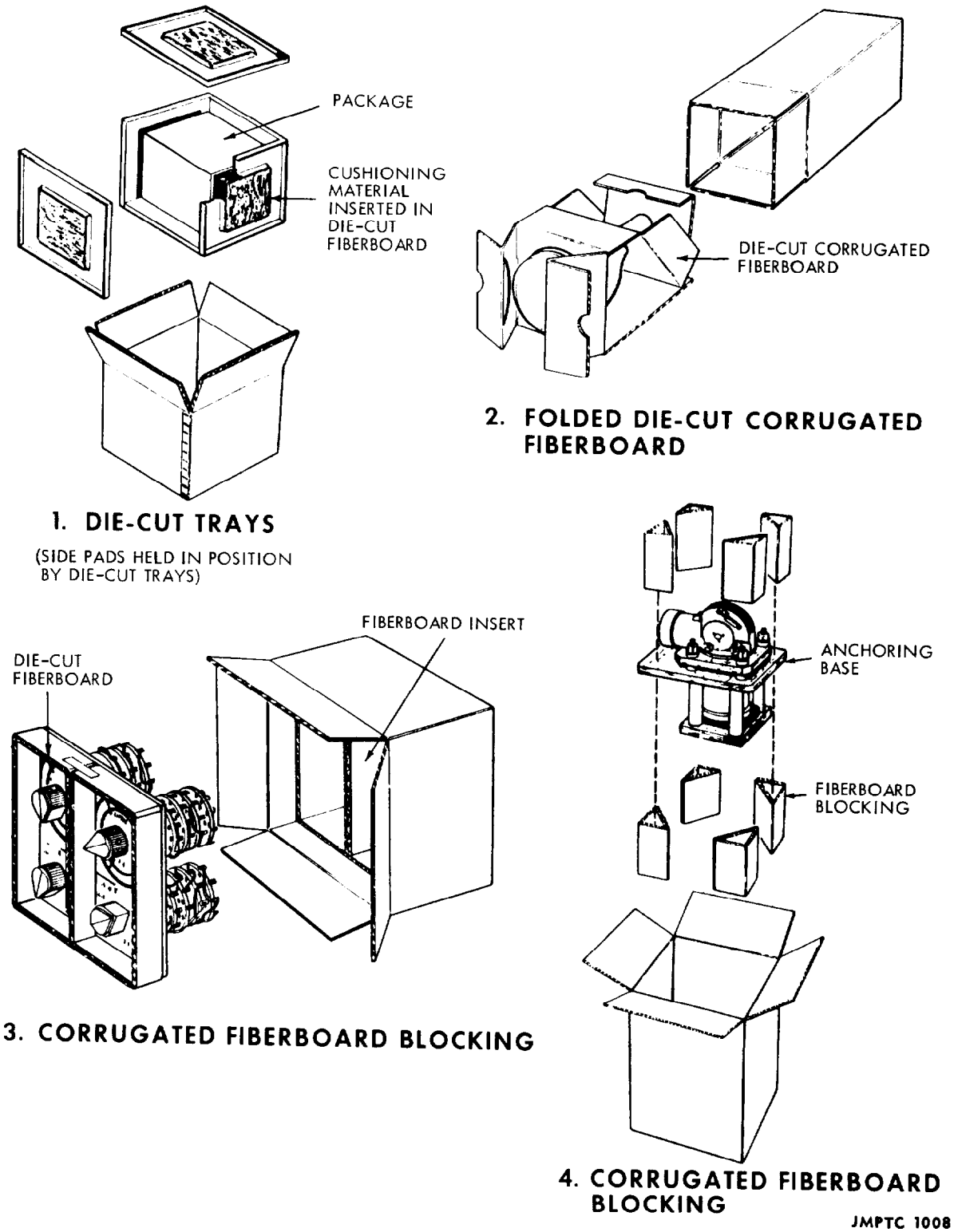

Figure 9-6. Methods of cushioning and blocking.

j. Use of Barriers. Protection against abrasion should be provided to highly finished surfaces or easily marred surfaces by wrapping or covering with cushioning material. Surfaces that might be damaged by contact with cushioning materials should be separated with a noncorrosive paper conforming to specification MIL-P-130, or a grease proof barrier conforming to specification MIL-B-121, grade A. If there is a need for protecting special items beyond these requirements, a kraft paper with a cohesive coating should be applied.

k. Use of Wood or Plywood. Wood or plywood may be used alone or in combination of blocking and bracing. These materials should be positioned against those parts of the item capable of withstanding the applied dynamic forces, or so that they will bear against blocking pads or pressure strips that will adequately distribute such force. When utilizing these materials, they should be designed to permit easy removal without damage to the contents.

(1) *Wood.* Wood used for blocking and bracing should conform to the requirements of MIL-STD-731. Whenever possible, wood blocks or braces should be placed so that the load is applied against the end grain of the member, as shown in figure 9-7. If this cannot be done, the load should bear on the edge grain. In this manner, the maximum strength of the brace is used. The ends of braces should be secured in place by utilizing pockets or by other means. Figure 9-8 illustrates an acceptable method for securing braces.

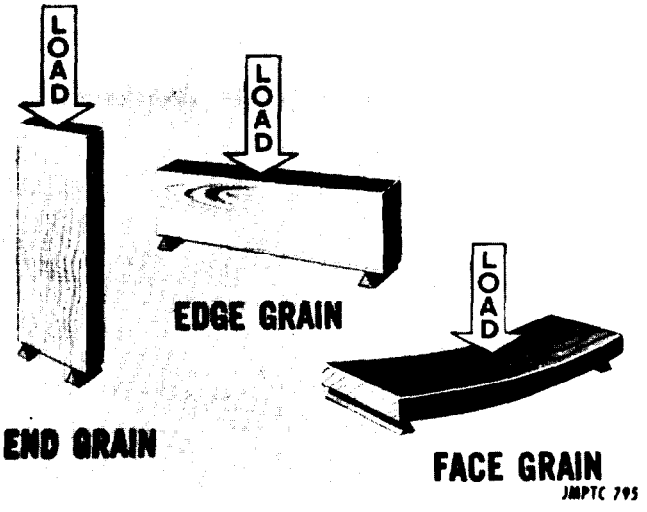

Figure 9-7. Positioning load.

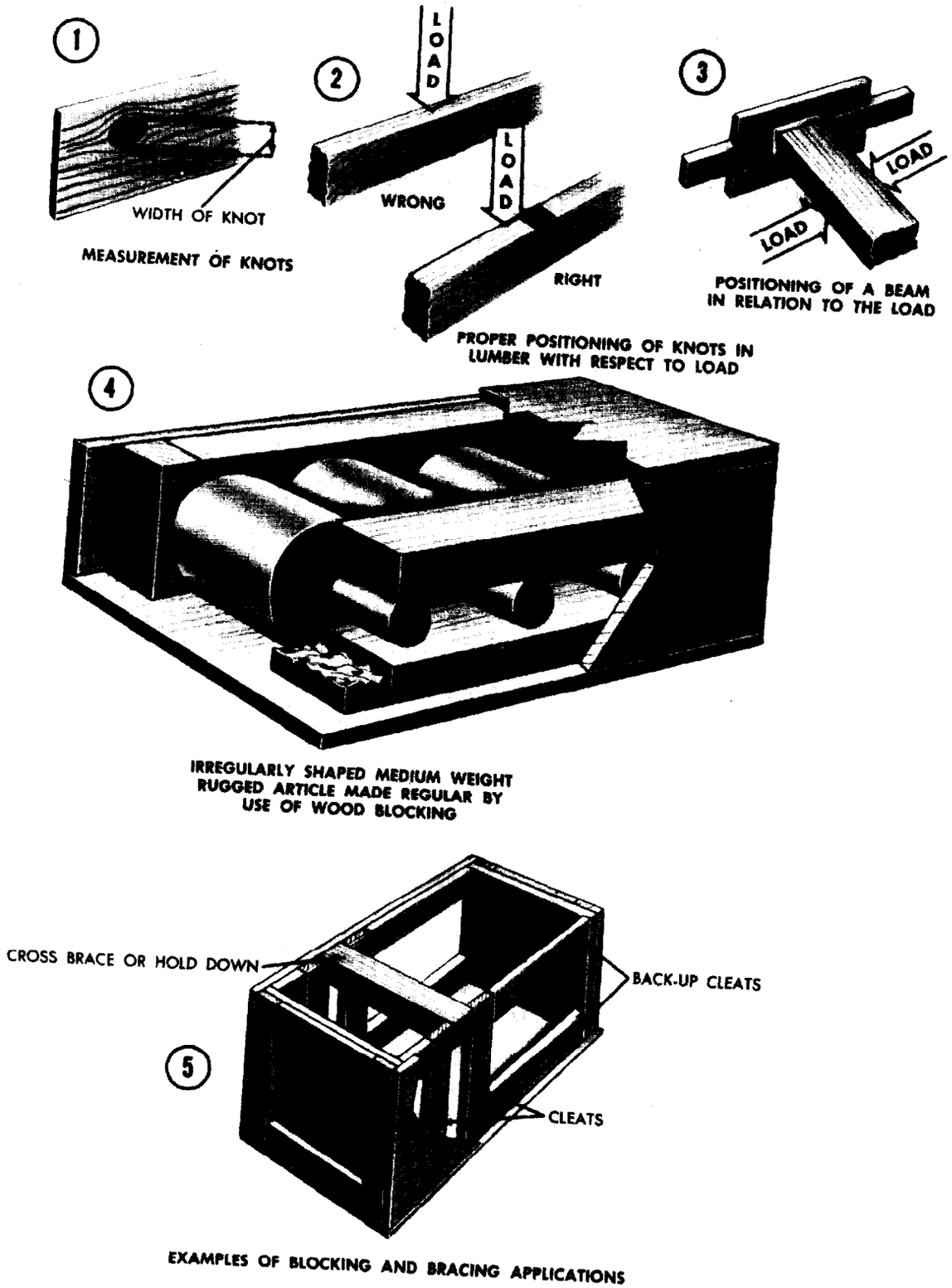

JMPTC 236

Figure 9-8. Use of wooden blocks and braces.

(2) *Plywood.* Plywood used for blocking and bracing shall conform to specification NN-P-530, group A, (grade 3-4, Type III) or group B, (CD, interior with exterior glue.) Plywood can be used to an advantage where thin blocking is required, on account of its resistance to splitting or where the blocking must be flexible to conform to the contour of the item. Plywood is also used as a gusset plate to reinforce joints of a supporting member. Plywood excels where a large mounting panel is required. As a base for bolted articles, again because of its resistance to splitting, plywood has an added advantage in that it is obtainable in wide panels. For light items, ½- or ¾-inch plywood should be used. For medium and heavy articles, two or more pieces of plywood can be fastened together, or a series of strengthening cleats can be added to the panel. Figure 9-9 illustrates some of the uses of plywood for blocking and bracing.

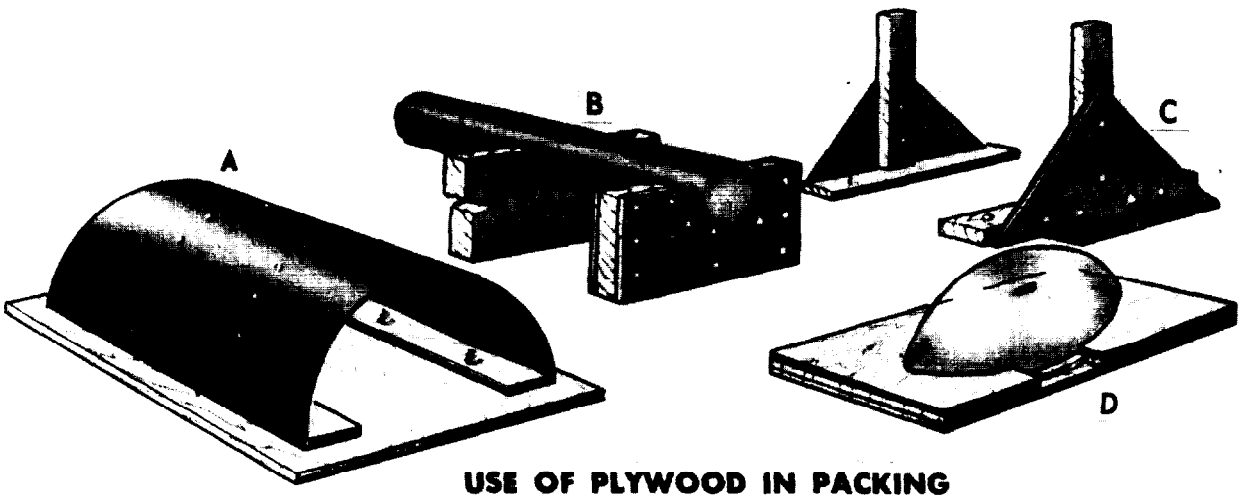

USE OF PLYWOOD IN PACKING

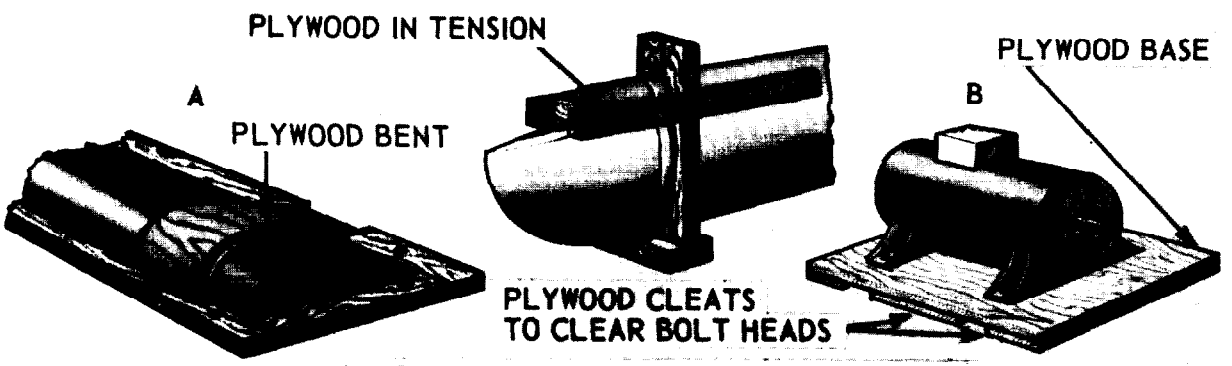

SPECIAL USES OF PLYWOOD IN PACKING

JMPTC 1334

Figure 9-9. Use of plywood for blocking and bracing.

l. Use of Nails. Nails are the type of fasteners most frequently used for blocking and bracing methods. The standard cement-coated or chemically etched sinkers and coolers are the nails most commonly used. Large-headed nails are recommended for use in plywood which is from ½ inch or less to prevent nailheads from pulling through the plywood. All nails that are not clinched should be cement-coated, etched or mechanically deformed (helically or annularly threaded). Unclinched nails should be as long as practical without splitting the wood. They should not be shorter than three times the thickness of the member holding the nailhead, for ten-penny nails or smaller, or not shorter than the thickness of the same member plus 1½ inches when using twelve-penny

(12d) nails and larger. Other nailing rules are as follows:

(1) When nails are loaded transversely (laterally) to their length in blocking and bracing joints, they need not be clinched.

(2) End grain nailing in solid wood or edge nailing in plywood is not permitted.

(3) Nails should be driven through the thinner member into the thicker member wherever possible.

(4) Nails should not be subjected to withdrawal stresses.

(5) Nails should not be driven closer to the end of a piece of lumber than the thickness of the piece and not closer to its side than one-half its thickness.

(6) Ends of blocks and braces should not be fastened to a wood container by end grain nailing, toe nailing, or similar methods but would be fastened to a sturdy part of the container or held in place by parallel cleats or other side-grain nailing methods, as illustrated in figure 9-8.

(7) Blocking and bracing should be applied against areas of the item(s) that are of sufficient strength and rigidity to resist damage, as illustrated in figure 9-8.

m. Use of Bolts and Bolting. Bolts commonly used for blocking and bracing are step and carriage bolts. The bolts are required to conform to specification FF-B-584, type I, class 1, style a or c. Bolts are used for fastening wood or plywood blocking and bracing where necessary to facilitate disassembly for removal of container contents. Bolts should also be used for fastening blocking and bracing members that are too thick for proper fastening with nails. Boltholes in wood or plywood should be the same diameter as the bolts. When an item is bolted to the base, the bolthead should be on the outside of the container base. Use standard cut washers under the nuts to decrease the possibility of the bolt pulling through the wood.

9-7. Application of Anchoring Materiels

Anchoring of heavy items should be accomplished by securing the item to a base with tension devices, either by bolting through boltholes on the item or by metal strapping, cables, tie rods, chains, wire, or other tension devices attached to, or applied over, the item, or by both. (Refer to Vol II of the "Packaging Manual" for details.)

a. Use of Anchor Bolts. Articles having mounting holes in areas that can withstand rough handling without damage should be bolted to either the base of the container or to an auxiliary base.

(1) The boltheads holding the item to the base should be located on the underside of the base.

(2) The heads of all anchor bolts should bear against a wide washer conforming to specification FF-W-92, type A or B, grade I, class A, medium size.

(3) Bolts passing through mounting boltholes should form a snug fit. Precision boltholes should be fitted with bushings to prevent damage.

(4) When mounting an item to a skid-type base, the anchor bolts should pass through the skids or through loadbearing members that are bolted to the skids.

(5) Boltholes in wood should be of the same diameter as the bolts.

(6) After the nuts have been tightened, apply asphaltum, paint, lacquer, or P-1 or MIL-P-116 on the threads; use either lock nuts, lock washers, or cotter pins with the nuts. Metal plates or flat washers are used between lock washers and wood to prevent direct contact.

NOTE

Lag screws will not be used in lieu of carriage or step bolts.

b. Use of Metal Strapping. The use of metal strapping to tie down an item to the base or other face of the container is often the only convenient procedure possible.

(1) Tiedown strapping should be securely attached to, or looped over, the item and anchored to the container or base, either by looping around a load-bearing member, or by utilizing steel slotted anchor plates secured to the container or auxiliary base.

(2) Cushioning material or other suitable edge protectors (i.e., metal or fiberboard) should be used under the straps to prevent damage to the item.

(3) Whenever possible, all lengths of strapping used for holding the item should be of equal length.

(4) Each tiedown strap passed over an item is considered as one piece.

(5) All tiedown straps should be tensioned and sealed or tied securely.

9-8. Absorbent Materials Used for Packaging Hazardous Liquids

a. Bottled Liquids. Bottled liquids are shipped by surface and air transport. Of course, the most hazardous conditions exist when shipping by air. DOT regulations require that these materials be packaged with an absorbent cushioning material to absorb the liquid if the bottles should break.

Bottled liquids are packaged in DOT regulation or equivalent military or Federal specification containers and with absorbent materials.

b. Selection of Absorbent Materials. There are many absorbent cushioning materials available; however, when packaging liquid hazardous materials (flammable and corrosive), the field is narrowed to those that have been tested and approved for use. Absorbent materials that are approved include untreated vermiculite, diatomaceous earth, whiting, or sifted ashes.

c. Overpacking. When hazardous materials require overpacking, sufficient absorbent cushioning materials must be used to secure and position the interior container(s) against damage or distortion, or to absorb any spillage.

d. Packaging Personnel. Packaging personnel have the responsibility to ensure that all cushioning materials used are satisfactory in all respects, and do not react adversely with the contents of the package.

NOTE

Hay, excelsior, ground cork and treated or untreated asbestos are prohibited for use as an absorbent material.

e. Assistance on Use of Absorbent Material. Packaging personnel requiring assistance on the use of absorbent materials may contact—

Air Force Packaging Evaluation Activity
ATTN: AFLC/DSTZ
Wright Patterson AFB, OH 45433-5999
DSN 787-2638

9-9. Computation of Absorbent Materials for Hazardous Liquids

a. Joint Service Publication AFR 71-4/TM 38-250/NAVSUP PUB 505 Rev/MCO P4040.19/DLAM 4145.3 regulates the packaging of hazardous materials for air shipment.

b. The amount of absorbent material such as vermiculite or diatomaceous earth is shown in table 1-2 of the above document.

CHAPTER 10
AIR DELIVERY

10-1. Definition of Terms

Air movement is a general term covering all transport of units, personnel, supplies, and equipment by air. It includes air delivery, air landing and air transport, and covers both tactical and administrative air movements.

a. Air Delivery. Air delivery is the air movement of personnel, supplies, and equipment, either tactical or administrative, in which unloading is accomplished in flight. This is synonymous with airdrop.

b. Air Transport. Air transport is a nontactical method of air movement wherein personnel, supplies, and equipment are moved administratively and air landed. Terminal-type facilities for loading, unloading, and transit handling of cargo and personnel are normally utilized.

c. External Air Transport. External air transport is the movement of supplies and equipment outside the fuselage of an aircraft, either by attachment to wing shackles on fixed-wing aircraft, or to cargo hooks.

10-2. Types of Air Delivery

Air delivery can be classified into two basic divisions as follows:

a. Rigged or packaged supplies and equipment for airdrop from aircraft.

(1) *The freedrop.* No parachute or retarding device is used. Loads, such as barrier material or clothing in bales, etc., descends at a rate of 130 to 150 feet per second. Supplies which are freedropped are done so when no other means of aerial delivery are available and is done strictly for field expediency.

(2) *The high-velocity or HV airdrop.* Ring slot cargo, cargo-extraction, and pilot parachutes stabilize loads for HV airdrops. Items are placed on energy-dissipating material and rigged in airdrop containers. The descent is 70 to 90 feet per second. Subsistence, petroleum products, and ammunition are examples of items which may be HV airdropped.

(3) *The Low-Velocity or LV airdrop.* This involves use of cargo parachutes to reduce the rate of descent to no more than 28 feet per second. Items rigged on airdrop platforms or in airdrop containers are placed on energy-dissipating material to lessen the shock. Fragile material, vehicles, and artillery may be airdropped in this manner.

(4) *The low-altitude-parachute-extraction or LAPE airdrop.* LAPE is considered a special-method airdrop and will be mentioned in paragraph 10-3*f*(1).

(5) *High Altitude Low Opening airdrop or HALO.* This is used to airdrop supplies above the threat of enemy fire. The rigged load is pulled from the aircraft by a stabilizing parachute and freefalls to a low altitude where a cargo parachute opens to allow a low-velocity landing.

b. Air Landing. Air landing delivery is the delivery of supplies and equipment from an aircraft which has landed on an airstrip. There is no excessive landing shock with this method of delivery and thus no special packing is required.

10-3. Methods of Air Delivery

a. Door Load. In the door load method, the load is pushed or skidded out of the door of the aircraft. This method is suitable to all three types of air delivery. The wing load method is adaptable to all three types of air delivery. The load is limited in size by the size of opening in the aircraft, and in weight by personnel capabilities available to eject the load.

b. Wing Load. In the wing load method, the loads are rigged in containers and are attached to drop load shackles affixed to the wings of aircraft adapted to all three types of air delivery. The wing load method is adaptable to all three types of air delivery. The limitations of the load are determined by the load-carrying capacity of the wings of the aircraft.

c. Gravity. The gravity method of air delivery consists of load-restraining ties release manually or by a release parachute, allowing the load to roll out of the cargo compartment of the aircraft, which is flying in drop altitude with the nose slightly elevated.

d. Extraction. The extraction method is designed to extract platform loads from the cargo compartment of the aircraft by using the extraction parachute to pull the load out of the aircraft. This method is used to extract large guns, vehicles, special purpose equipment, or bulk ammunition, and supplies rigged on air delivery platforms.

e. Special Methods of Air Delivery

(1) *Low Altitude Parachute Extraction System or LAPES.* This system involves use of extraction

chutes to extract palletized loads of supplies and equipment from aircraft which may fly as low as 5 to 10 feet above the ground. LAPES delivery of items such as vehicles, artillery, ammunition, supplies, equipment and water may be the preferred method of delivery when in cases of adverse weather and terrain conditions, or when tactical conditions call for clandestine operations.

(2) *Helicopter hook load.* This method of air delivery requires the load to be suspended from the helicopter by a hook device, transported to the designated area, and air-dropped by releasing the load from the hook.

(3) *Advantages and disadvantages.* The advantages of the above special methods of delivery are obvious when considering the need for rapid delivery of items or supplies under certain tactical, weather, and terrain conditions as mentioned. However, the disadvantages must also be considered due to the possibility that supplies and equipment may be lost or damaged during these operations. Proper packaging and rigging of items for these operations should help to prevent damage.

10-4. Aircraft Utilized for Air Delivery

a. General. Aircraft utilized for air delivery may require modification to include installation of special air delivery equipment. Personnel responsible for preparing material for air movement must be familiar with types and characteristics of aircraft available.

b. Service Responsibilities. U.S. Air Force personnel are responsible for loading Army rigged platform loads, however; Army personnel may load platforms and install airdrop systems, under Air Force supervision. When aircraft other than U.S. Air Force are used, Army may be responsible for loading platforms, installing and operating the airdrop systems. For details on methods of rigging airdrop systems, consult the following publication: Army FM 10-500/Air Force TO 13C7-1-5 "Rigging Airdrop Platforms."

c. Types of Aircraft. Depending upon the particular mission, many factors are considered before the type of aircraft is selected. When the decision is made as to the type of aircraft required, one of the following three types may be selected;

(1) *Fixed Wing Utility.* This type of aircraft may be adapted or modified to provide capability for both the door load and the wing load. The U21 and C12 are examples of utility aircraft which may be so adapted.

(2) *Cargo.* This type of aircraft is specially designed to deliver supplies by the various methods. The C-5, C-130, and C-141 aircraft are examples.

(3) *Helicopter.* This type of aircraft is generally divided into three classes; cargo transport, utility, and attack. The CH-47, CH-54, and UH-60 helicopters are designed and used extensively for air delivery of cargo by either internal or external means.

10-5. Air Delivery Containers and Loads

a. General. Standard air delivery containers are divided into two general classes according to their load-carrying capacity. These classes are limited standard (light drop), and standard (heavy drop). Making up a container load requires the use of an air delivery container, a cargo parachute, and for some loads, cushioning materials. The air delivery container, with the required cushioning materials, provides the means for packaging and cushioning the item to be delivered, and also provides a means for attaching the cargo parachute.

(1) *A-21 cargo bag.* The A-21 air delivery cargo bag is a bar-type container that is generally used for delivery of fragile and nonfragile supplies and equipment weighing from 100 to 500 pounds. The A-21 is shown in figure 10-1.

(2) *A-22 cargo bag.* The A-22 air delivery cargo bag is also a bag-type container used for delivery of fragile and nonfragile loads. The difference in the A-22 is that it can carry loads of 500 to 2,200 pounds. The A-22 is also shown in figure 10-1.

A-21 AIRDROP CARGO BAG

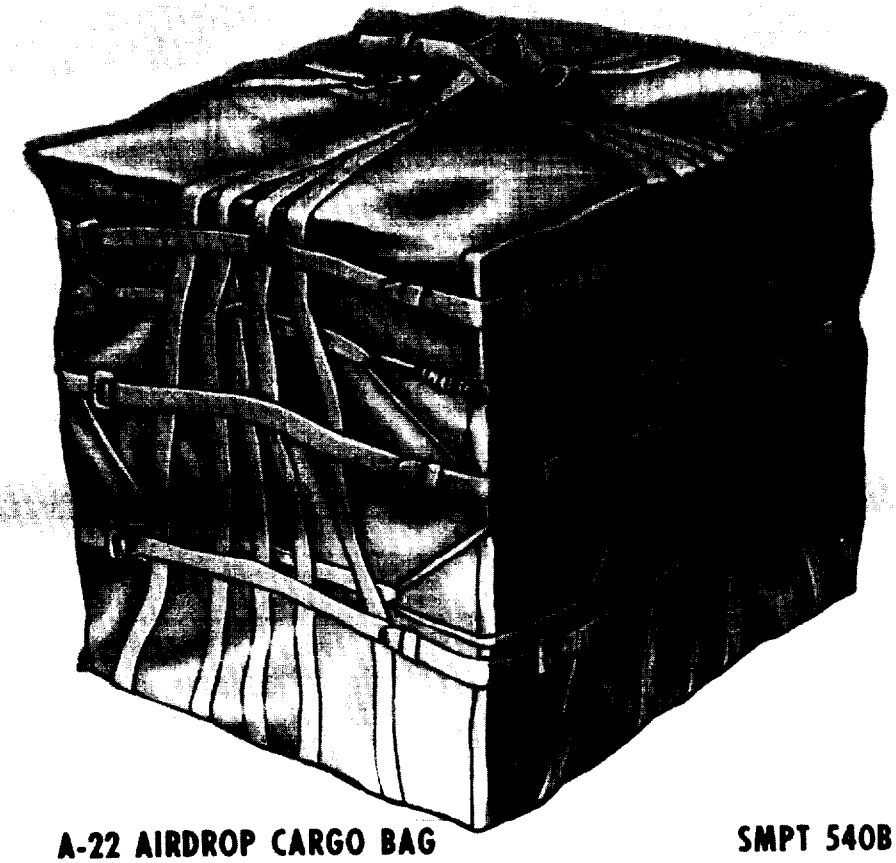

A-22 AIRDROP CARGO BAG

SMPT 540B

Figure 10-1. Air delivery containers packed for airdrop.

(3) *CTU-2A high speed aerial delivery container.* The CTU-2A, shown in figure 10-2, can deliver up to 500 pounds of supplies such as weapons, water, food, and survival kits from high-speed aircraft. The container in operation, shown in figure 10-3, is designed to deliver the load by parachute but may possibly be destroyed by burning before the parachute fully deploys. The empty container with parachute weighs 213 pounds and is 106 inches in diameter. The cargo compartment is 61 inches in length.

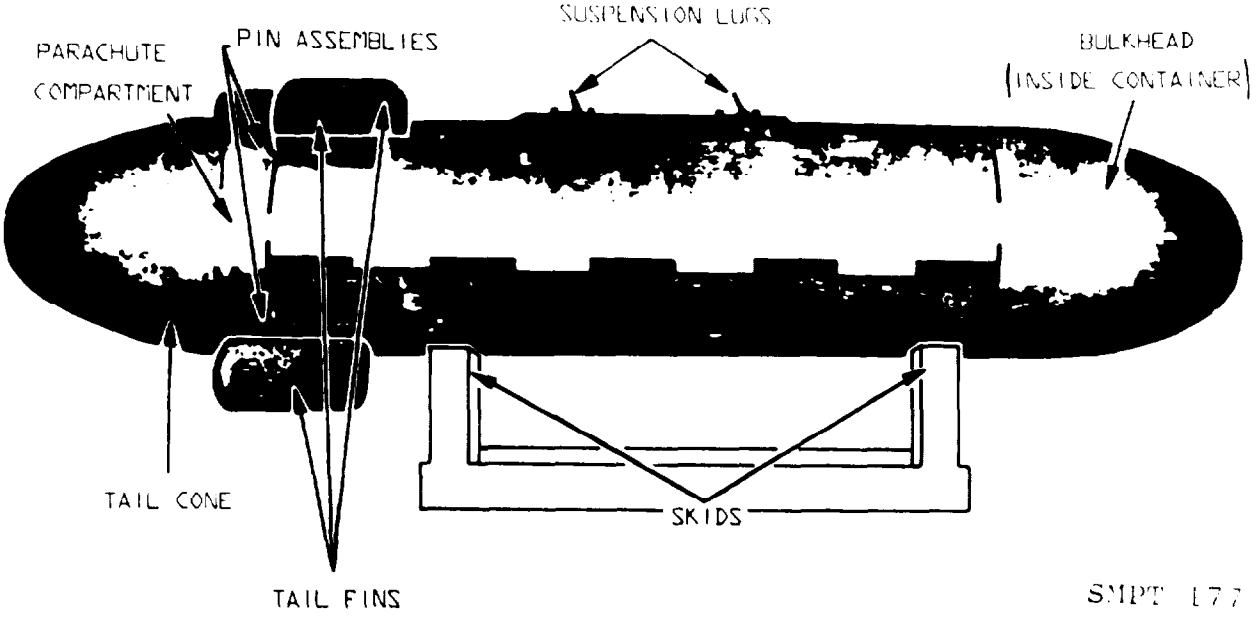

Figure 10-2. CTU-2/A container packed for airdrop.

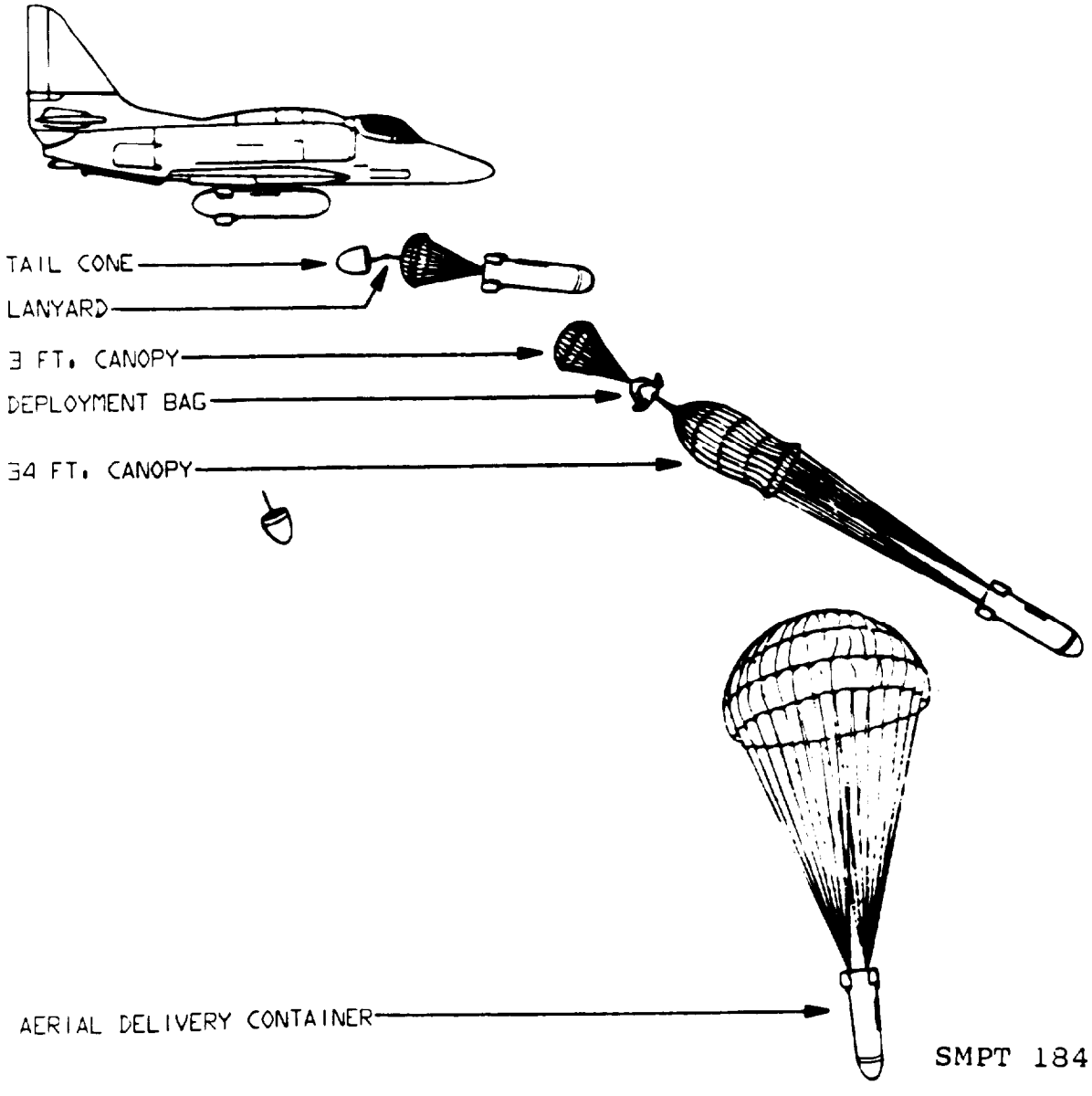

Figure 10-3. CTU-2/A container in operation.

b. Collapsible Fuel Drums. An additional container which is adaptable to transportation by aircraft, as well as to airdrop from fixed-wing aircraft, is the 500-gallon capacity, cylindrical, liquid fuel, collapsible fabric drum (Specification MIL-D-23119A). This drum is shown in figure 10-4.

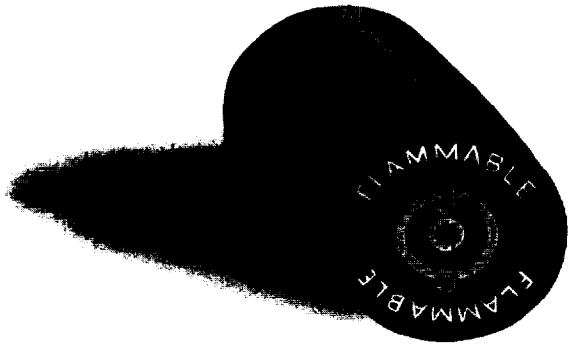

JMPTC 1714

Figure 10-4. Collapsible fuel drum.

NOTE

Aerial delivery containers, platforms, and kits have been designed to replace the aerial delivery containers A-4, A-5, A-6, A-7, and A-7A which are being gradually phased out of use. However, these early containers will remain in use for some time.

10-6. Types of Items Rigged in Air Delivery Containers

a. Bulk Supplies. Small quantities of ammunition, rations, clothing, and other bulk supplies are delivered in air delivery containers.

b. Special Purpose Equipment. Small items of equipment, such as radios and telephones, are rigged for delivery in air delivery containers.

c. Weapons. Individual and crew-served weapons, such as rifles and mortars, are delivered by this means. Crew-served weapons are usually disassembled prior to packing.

d. Combination Loads. Weapons or small items of special purpose equipment are commonly combined with bulk supplies in air delivery containers. A typical combination load is the 81-millimeter mortar with 20 rounds of ammunition.

10-7. Cushioning Materials Used for Container Loads

a. Shock Pads. Shock pads are commonly used to cushion loads in the A-5, A-21, and A-22 containers. In general all shock pads are similar in construction, consisting chiefly of layers of felt padding encased in cotton duck. Pads are issued in three sizes: A 12- by 12-inch pad, and 18- by 18-inch pad, and a 24- by 24-inch pad. The number of layers used depends upon the item being dropped. Examples are shown in figure 10-5.

b. Cellulose Wadding. Cellulose wadding is used to wrap, pad, or otherwise cushion loose and fragile items. The wadding is issued in roll form usually 1 inch thick, 20 inches wide, and 66 feet in length. See figure 10-5.

c. Felt Sheets. Wool felt sheets, varying in thickness from ¼ inch to ¾ inch, are used to pad or cushion loose or fragile components of container loads, as shown in figure 10-5.

d. Honeycomb. Honeycomb material is made of unbleached kraft paper, also shown in figure 10-5. Class 3 honeycomb is double-faced and is used primarily as an energy absorber for airdrop of heavy materials, such as vehicles. Whenever the material is used for the airdrop of heavy equipment or vehicles, it is stacked in layers, as shown in figure 10-6, and placed on an airdrop platform, to be mentioned later, according to specific rigging instructions. Anyone attempting such rigging should consult a specific AFR, TM, or TO for the supplies or equipment intended to be airdropped. Army FM 10-500, Air Force TO 13C7-1-5 is recommended for details on rigging airdrop platforms. Honeycomb may also be used for other special packaging applications.

e. Other Material. A variety of other materials may be used as cushioning. Tests have been conducted on the use of empty beer cans and foamed plastics. These materials may be used under field conditions. The use of aluminum cans is an innovation for field expediency purposes only. If they are used, cans should not be reused for air drops. Honeycomb paper is, however, the preferred material for air drops.

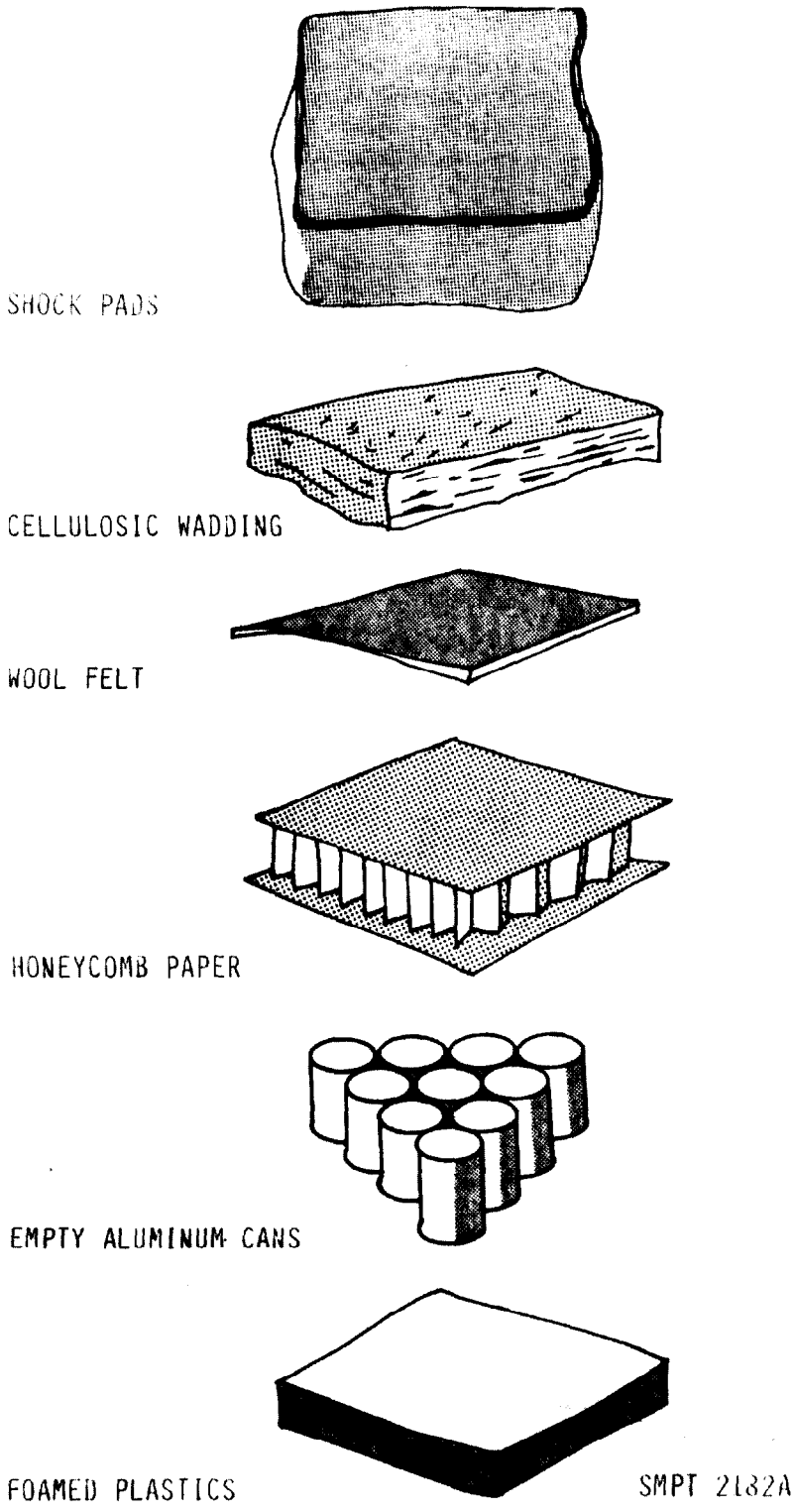

Figure 10-5. Energy absorbers for airdrop.

Figure 10-6 depicts a two-platform load of vehicles. The vehicles rest on honeycomb material to absorb shock impacts as a result of an airdrop.

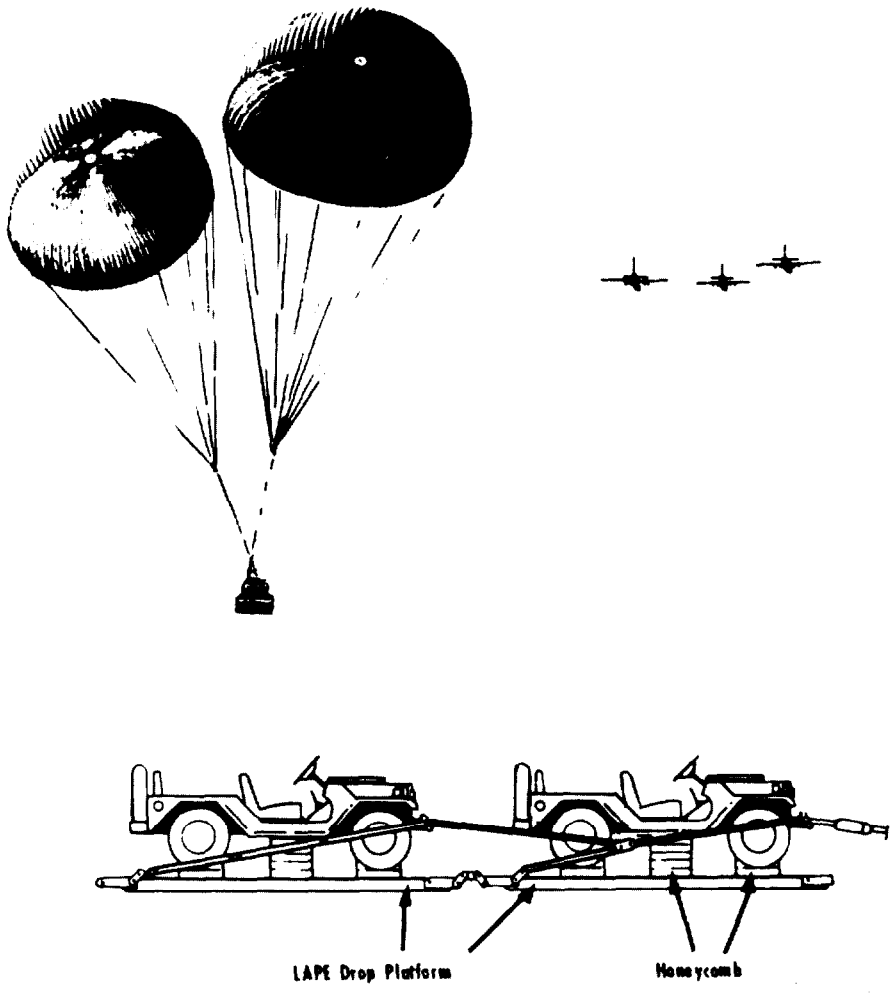

Figure 10-6. A two-platform load for tandem LAPE airdrop.

10-8. Air Delivery Platforms

Air delivery platforms are designed as bases for supporting an airdropped load. An airdrop involves the extraction of a flatform load from an aircraft in flight so as to effect a speedy air-to-ground delivery of supplies and equipment to the forces in the field. The various kinds of airdrop delivery operations were mentioned previously, but the common types of platforms used for this purpose consist of the following:

a. Modular Airdrop Platform (Type II) Assembly. The length, width, weight, and other dimensions or limitations of this platform are listed in Table 10-1. This platform is shown in figure 10-7. Components of the platform are described below.

Table 10-1. Limitations for Type II Modular, Type V, and LAPE Modular Airdrop Platforms.

Length (feet)	*Width (inches)*	*Weight (pounds)*	*Platform Surface (square feet)*	**Minimum Rigged Weight*	*Maximum Rigged Weight*
		TYPE II MODULAR PLATFORM			
8	108	300	72	2,520	10,000
12	108	450	108	3,780	18,000
16	108	600	144	5,040	24,000
20	108	750	180	6,300	30,000
24	108	900	216	7,500	38,500
28	108	1,064	252	8,820	38,500
32	108	1,214	288	10,080	38,500
		****TYPE V PLATFORM*			
8	108	780	72	2,520	**10,000
12	108	1,170	108	3,780	**16,250
16	108	1,540	144	5,040	**22,500
20	108	1,830	180	6,300	**28,750
24	108	2,220	216	7,560	**35,000
28	108	2,670	252	8,820	**35,000
32	108	2,910	288	10,080	**35,000
		****LAPE MODULAR PLATFORM*			
8	108	628	72	2,520	10,000
12	108	1,092	108	3,780	18,000
16	108	1,456	144	5,040	24,000
20	108	1,820	180	6,300	30,000
24	108	2,184	216	7,560	36,700

* Minimum rigged weight for extraction purposes. Loads weighing less than 3,500 pounds rigged for drop from a C-141 aircraft MUST be rigged for platform extraction.

** The weights are for item-suspended load and do not include the weight of the recovery parachute. Modular platforms have a platform suspended weight limitation of no more than 4,000 pounds with a ¾-inch plywood load spreader and no more than 8,000 pounds with a strongback load spreader. When authorized, the 12- and 16-foot platforms with strongback load spreaders have an emergency overload suspended weight up to 12,000 pounds.

*** This platform is used for LAPE and LV airdrops. The 8-foot platform is used for LV airdrop only.

NOTE: The maximum rigged weight of a 24-foot type II modular platform may be increased to 35,765 pounds and the weight of a LAPE airdrop platform to 37,175 pounds when such is authorized in a rigging manual.

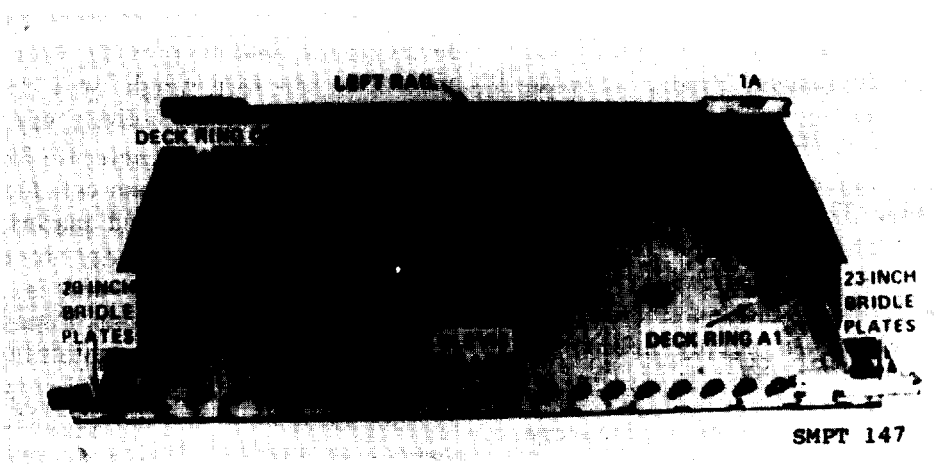

Figure 10-7. Type II modular airdrop platform.

(1) *Panels.* The platform panels are 48 inches long, 104½ inches wide, and 2⅝ inches thick. They are of sandwich construction with aluminum top and bottom and a core of balsa wood.

(2) *Side rails.* The side rails are made of an aluminum alloy. They are issued in 8, 12, 16, 20, and 24 feet lengths.

(3) *Tiedown clevises with bolts.* The steel tiedown clevises are bolted at appropriate positions along the rail to provide attaching points for lashings which secure the load to the platform.

b. LAPE Airdrop Modular Platform (Metric). The metric extruded aluminum platform is designed for use with aircraft equipped with dual rail aerial unloading kits. The metric platform is 108 inches wide and can be assembled in 8, 12, 16, 20, and 24 feet lengths. This platform is primarily designed for use with the Low Altitude Parachute Extraction System (LAPES); however, it may be used when dropping LV airdrop loads. The metric platform has bridle attaching plates, nose, and front skid (for LAPES) that are not required for LV drops.

c. Type V Airdrop Platform. This platform, as shown in figure 9-8, is designed for use with aircraft equipped with the dual rail aerial unloading kits. The platform is 108 inches in width and can be assembled into adjustable lengths by 4-foot increments from 8 feet to 32 feet. It will be used for LV and LAPE airdrops. Dimensions and other limitations of this platform are listed in mentioned Table 10-1.

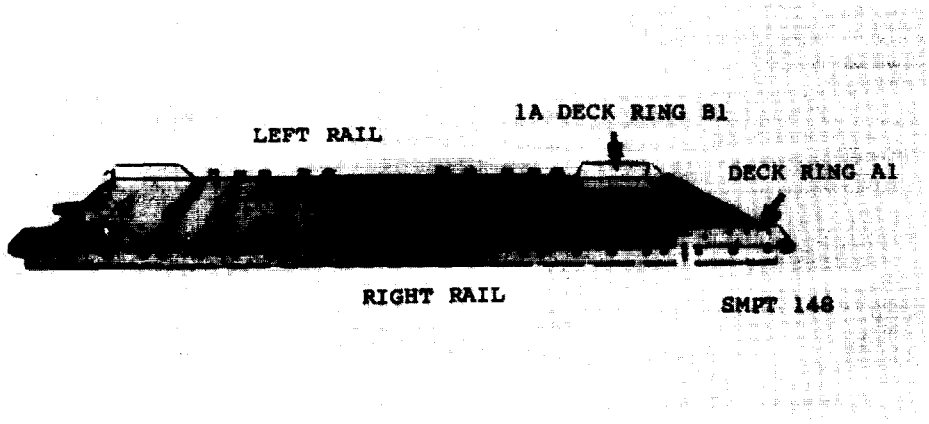

Figure 10-8. Type V airdrop platform.

10-9. Types of Items Rigged on Air Delivery Platforms

a. Vehicles. General utility and special purpose vehicles with their accessories and equipment are prepared for air delivery by rigging on platforms.

b. Special Purpose Equipment. Special purpose items, such as earthmoving machinery, welders, etc., are also rigged on platforms for air delivery.

c. Artillery Pieces. Some artillery pieces are dropped on platforms. These pieces range from multiple 50-caliber machinegun trailer mounts to 105-mm howitzers.

d. Bulk Supplies. Large quantities of bulk supplies consist of all classes of supply needed by combat units.

10-10. Trends and Developments in Air Delivery

a. Air Delivery Operations. The future efficiency of air delivery operations will be dependent to a large degree upon the packaging of supplies and equipment. It is assumed that a major portion of energy absorption requirements can be provided by packaging. Continued effort in the research and development field to provide more impact resistance with less tare weight will result in a more usable and efficient air delivery operation.

b. Increased Use of Honeycomb Energy Absorber. Technical recommendations call for increased use of "honeycomb" corrugated materials as replacement for shock pads as energy absorbers. This material is both expendable and is less expensive than other suitable materials. Figure 10-9 shows a typical honeycomb stack, containing lumber, plywood, cutants, and layers of honeycomb. This is another example of the development of packaging systems to augment DOD's air delivery capabilities.

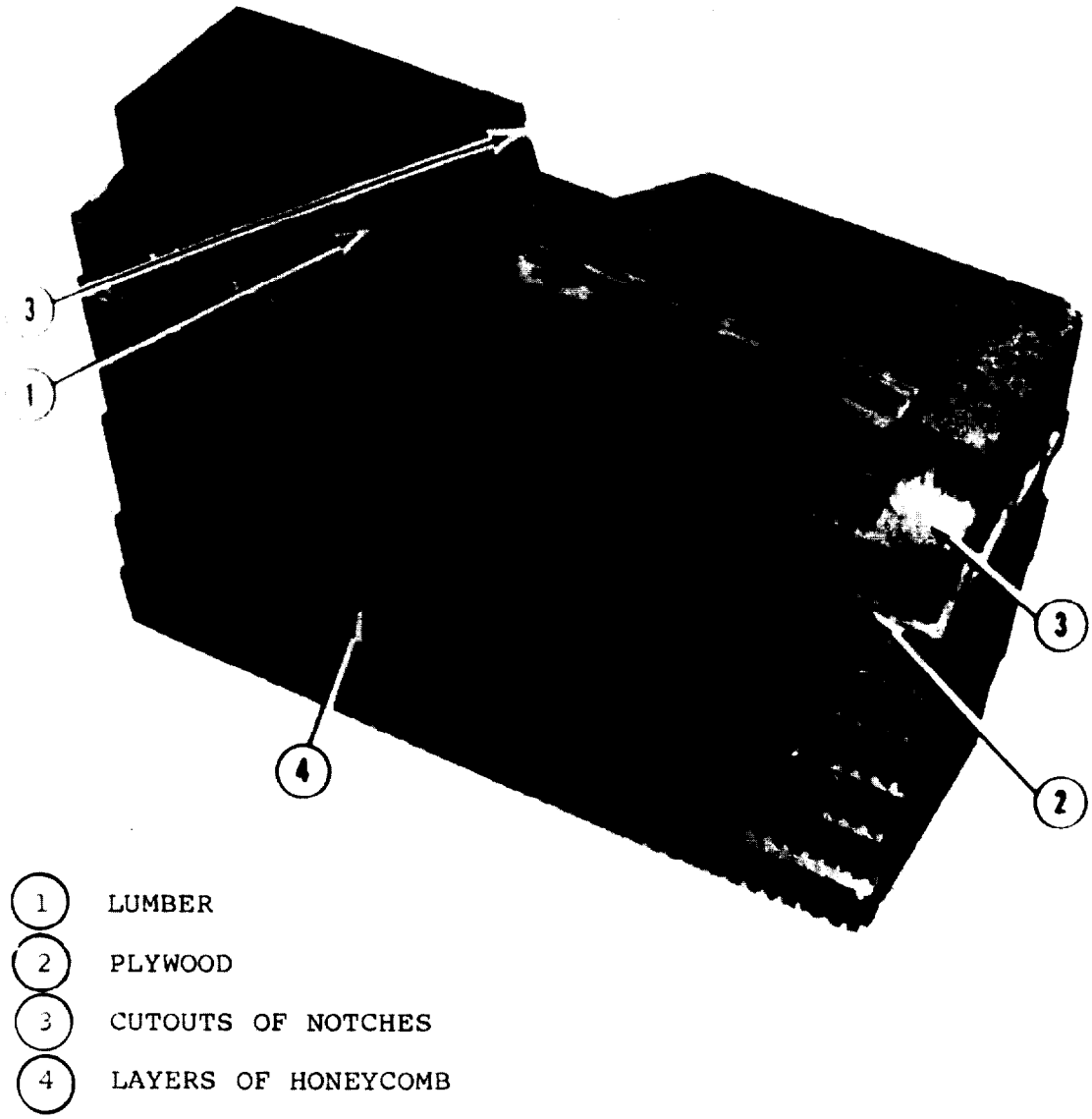

Figure 10-9. Typical Honeycomb Stack.

c. Shock Mitigation. Studies and tests have been made on a more complex shock-attenuator system consisting of an inflated rubber bag which will absorb initial impact on contact with the earth by means of a "blowout" valve exhausting air at the point of maximum compression.

10-11. 463L Aerial Delivery and Cargo Handling Systems

The 463L cargo rail system is installed in the C-130, C-141, and C-5 aircrafts. This system complements the 108 inch by 88 inch 463L logistical pallets as well as the Type II modular and metric airdrop platforms. This system is provided with outboard conveyor frames and intermediate rollers down the length of the cargo compartment. The outboard frames provide guides for positioning pallets forward and aft inside the aircraft. In addition, locks are provided to restrain the pallets against forward and aft movement and meet all restraint requirements. A lip on the top side of the outboard frame assembly prevents vertical movement. Spacing of locks are adequate to allow position of the logistical pallets at any point throughout the cargo compartment. The rail locks can be adjusted to provide restraint for airdrop platforms until the extraction parachute is deployed and overcomes the preset tension.

By Order of the Secretaries of the Army, the Navy, and the Air Force:

GORDON R. SULLIVAN
General, United States Army
Chief of Staff

Official:

MILTON H. HAMILTON
Administrative Assistant to the
Secretary of the Army

KEVIN McCOOK
Captain, SC, United States Navy
Deputy Commander, Physical Distribution
Naval Supply Systems Command

Official:

MERRILL A. McPEAK, *General, USAF*
Chief of Staff

Official:

EDWARD A. PARDINI,
Colonel, USAF
Director of Information Management

R.K. RIGGS
Acting Deputy Chief of Staff for
Installations and Logistics

Distribution:

Army: To be distributed in accordance with DA Form 12-34E, Block 0835, requirements for TM 38-236.

Navy:

M125040000

Air Force:

F.

*U.S. Government Printing Office: 1992 — 309-044/60050